QH™ UNITÉS DE PUISSANCE / POWER UNITS

HYDRAULIQUE / HYDRAULIC

12 VDC / 24 VDC / 120 VAC / 240 VAC

ASSEMBLED IN CANADA

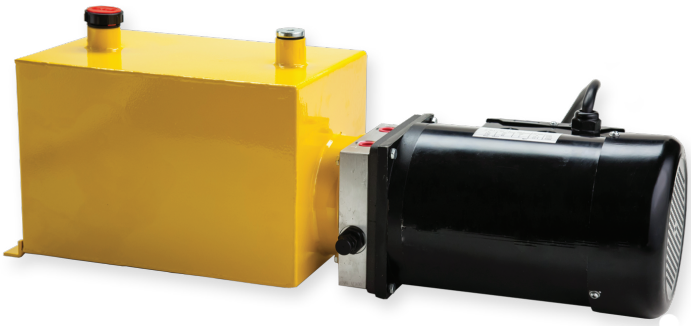

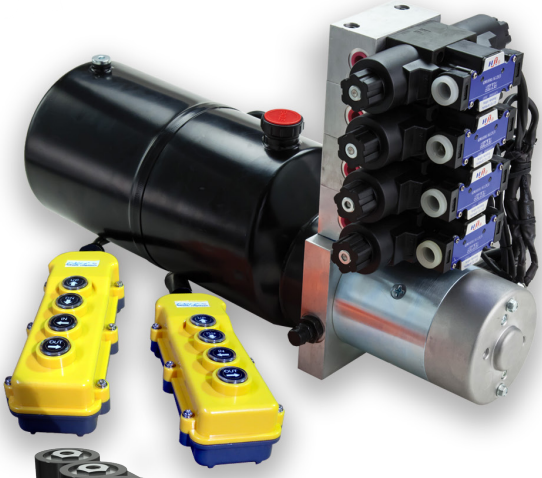

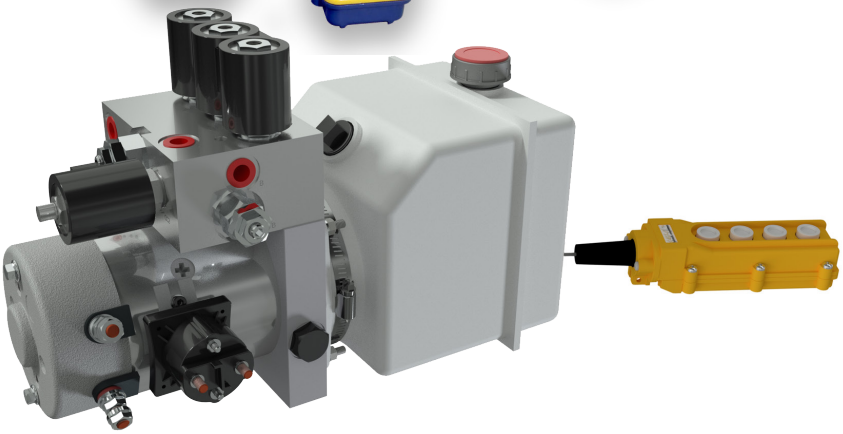

www.QuebecHydraulique.com™

YOUR ONE STOP SHOPPING SOURCE FOR ADDED VALUE AND QUALITY PRODUCTS

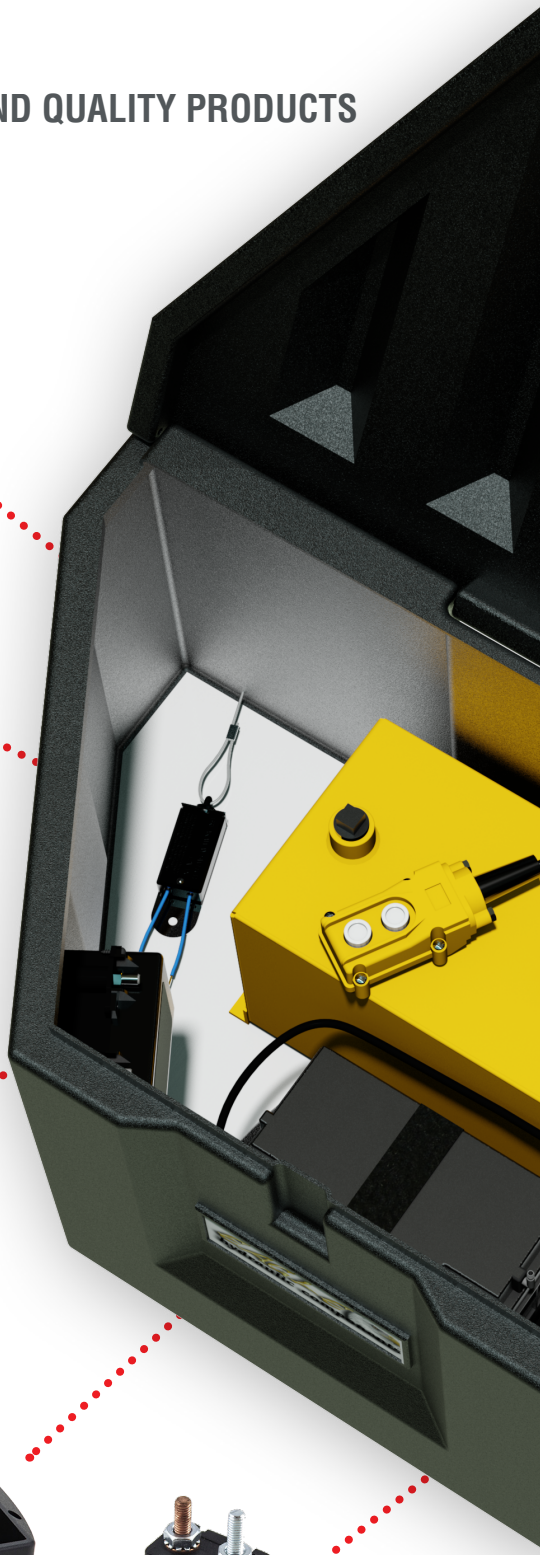

POWER UNIT
Model: 01, 02, 03, 06, 10, 11, 12, 13, 15, 24, 36, 48
Tank: From 1.7 Liters to 23,5 liters - Plastic or Steel
Pump: 0.8, 1.0, 1.3, 1.6, 2.1, 2.5, 3.2, 4.2, 5.8 & 8.0 cc available
Mounting: Horizontal

POWER UNIT REMOTE CONTROL
Including 20' of 16/3 Cables

Solar Charger
640130

BREAK AWAY KIT
640070
STAINLESS STEEL BOLT 5/16-18 x 3"
300080
STAINLESS STEEL HEX. NUT 5/16"
307120

BATTERY TRAY 7" x 10.5"
810800

AUTO-RESET FUSE
618110

All numbers given are nominal values and should be used for reference only.

POLYMER TOOLBOX WITH LOCKING HASP
36” W x 18.75” D x 17.72” H
810100
AMERICAN CHECKERPLATE ALUMINIUM TOOLBOX
36” W x 17.75” D x 16.375” H
810200
AMERICAN CHECKERPLATE ALUMINIUM HIGH TOOLBOX
36” W x 17.75” D x 20.125” H
810300

BULKHEAD FITTING
310160
BULKHEAD NUT
307140

WIRELESS REMOTE
CONTROL
BLACK (BX-W003)
630020

HYDRAULIC HOSE 3/8”
320XXX

BATTERY
CHARGER
640120

BATTERY CABLE RED, 18” LONG
610240
BATTERY CABLE BLACK, 24” LONG
610260
BATTERY CABLE RED, 24” LONG
610270

MASTER SWITCH
640010

ASSEMBLED IN CANADA

CUSTOMIZABLE OPTIONS

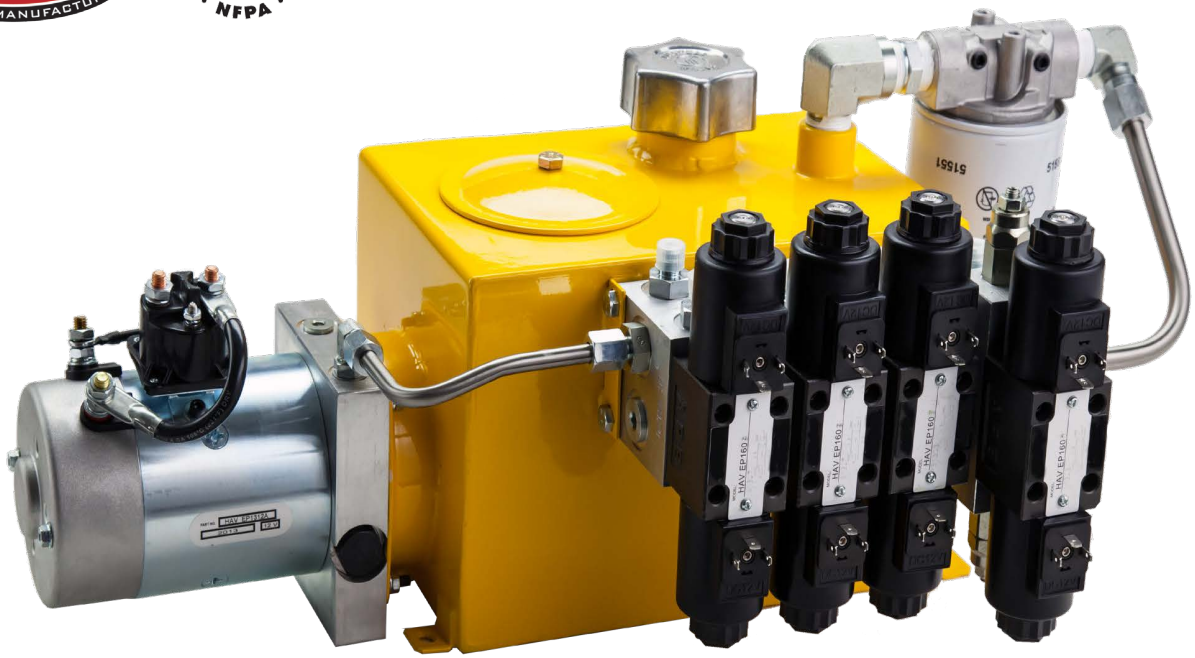

CUSTOM HYDRAULIC POWER UNIT

AERIAL LADDER TRUCK

POWER UNIT / UNITÉS DE PUISSANCE

POWER UNIT MODEL NUMBER BREAKDOWN

QH™ POWER UNITS ARE HIGHLY CUSTOMIZABLE. HOWEVER, WE ONLY STOCK THE MOST COMMON COMPONENTS. PLEASE CALL OUR SALES TO ASSURE YOUR SPECIFIC REQUIREMENT IS AVAILABLE.

ELECTRICAL MOTOR

11 = 12v (1.6 Kw Long Duty)
12 = 12v (1.6 Kw / 2.14 HP)
13 = 12v (2.0 Kw / 2.68 HP)
24 = 24v (2.0 Kw / 2.68 HP)
110 = 115v (1 HP)
111 = 220v (1 HP)
115 = 115v (1.5 Kw / 2 HP)
116 = 115v (2.24 Kw / 3 HP)
220 = 220v (1.5 Kw / 2 HP)
221 = 220v (2.24 Kw / 3 HP)
575 = 230v/460v/575v 3HP - 3Ph

PLASTIC TANK

B = Plastic 4 Liters (1.0 Gal.)
D = Plastic 6 Liters (1.58 Gal.)
F = Plastic 8 Liters (2.11 Gal.)
G = Plastic 10 Liters (2.64 Gal.) **K** = Plastic 4 Gallons (15.1 L)

METAL ROUND TANK

M = Metal Round 1.7 Liters (0.5 Gal.) **N** = Metal Round 2.8 Liters (0.75 Gal.) **O** = Metal Round 3.9 Liters (1.0 Gal.) **P** = Metal Round 5 Liters (1.3 Gal.) **Q** = Metal Round 6 Liters (1.59 Gal.) **R** = Metal Round 8 Liters (2.1 Gal.) **S** = Metal Round 10 Liters (2.6 Gal.) **T** = Metal Round 12 Liters (3.2 Gal.) **U** = Metal Round 14 Liters (3.7 Gal.)

METAL SQUARE TANK

V = Metal Square 3 Gallons (11.34 L)
L = Metal Square 4 Gallons (15.12 L)
W = Metal Square 5 Gallons (18.9 L)
X = Metal Square 6.24 Gallons (24.2 L)
Y = Metal Square Double Motor 7 Gallons (26.5 L)
Z = Metal Square Flat 6.25 Gallons (23.6 L)
E = Metal Square 8 Gallons (30.2 L)
A = Metal Square 10 Gallons (37.8 L)
***** = No Tank

GAS MOTOR

90 = Subaru Gas Engine, Manual

PUMP

08 = 0.8 cc **32** = 3.2 cc
10 = 1.0 cc **42** = 4.2 cc
16 = 1.6 cc **58** = 5.8 cc
20 = 2.0 cc **80** = 8.0 cc
25 = 2.5 cc

RELIEF VALVE

Two Digits: 00 x 100 PSI
Examples:
05 = 500 PSI
30 = 3000 PSI

TANK ORIENTATION

OMIT = Horizontal
1 = Vertical

Model Number

PU 12 A 25 W 12 A 30 X

VALVE VOLTAGE

A = 12v **B** = 24v
C = 110v **D** = 220v

TOOLBOX OPTIONS

C = Plastic Tool Box Kit
CA = Aluminium Tool Box Kit
R = Auto Reset
B = Breakaway
G = Battery Charger
M = Master Switch
T = Tool Trays (Pair)

BLOCK MODELS

01 = Basic P & T Ports, No Valve
02 = Pressure Up, Gravity Down, Single Acting with Electrical Valve
03 = Pressure Up, Gravity Down, Single Acting with Manual Valve w/ Motor Start
05 = Pressure Up, Gravity Down, Single Acting with Manual Valve
06 = Pressure Up, Gravity Down, Double Acting from Side to Side w/ Relief Valves (Snow Plow)
10 = Pressure Up and Down, Double Acting With External Check Valves and Relief on "B" Port
11 = Pressure Up and Down, Double Acting With Internal Check Valves and Relief on "B" Port
12 = Pressure Up and Down, Double Acting with D03 Solenoid Valve
14 = Pressure Up and Down, Double Acting with D02 Solenoid Valve
15 = Pressure Up and Down Double Acting, Manual Valve DO3
16 = Pressure Up and Down Double Acting, Manual Valve DO2
24 = Pressure Up and Down, Double Acting, 2 x D03 Solenoid Valve
28 = Pressure Up and Down, Double Acting, 2 x D02 Solenoid Valve
36 = Pressure Up and Down, Double Acting, 3 x D03 Solenoid Valve
42 = Pressure Up and Down, Double Acting, 3 x D02 Solenoid Valve
48 = Pressure Up and Down, Double Acting, 4 x D03 Solenoid Valve
56 = Pressure Up and Down, Double Acting, 4 x D02 Solenoid Valve

BLOCK OPTIONS

D = Piloted Check VV Bank 1, Port A & B
E = Piloted Check VV Bank 1 & 2, Port A & B
F = One Way Flow Control Bank 1, Port A & B
G = One Way Flow Control Bank 1 & 2, Port A & B
H = Pressure Relief VV on One Bank, A>T and B>T
L = Add Level Gauge
P = 10cc Manual Hand Pump (avail. on model 02 and 03)
S = Single Acting on Bank 2
V = Pressure Comp. Flow Control (EP1215, Flow 1.3 to 2.25 gpm)
W = Wireless Remote Control
X = Without Remote Control

POWER UNIT / UNITÉS DE PUISSANCE

MODEL 01

This power unit has a basic circuit with “P” and “T” SAE#6 (9/16-18) ports. This circuit utilize a cartridge check and adjustable relief valve. The gear pump is equipped with a suction screen attach to a 90° elbow inside the tank which comes with a 3/4” NPT breather/dipstick. Design for external mobile valve, defined by the application.

OPTIONS:

- **Motor:** DC 12 & 24v, or AC 115/230V, single phase or AC 230/460/575V three phase
- **Tank:** From 1.7 liters to 23.5 liters. Plastic or Steel
- **Pump:** 0.8, 1.0, 1.3, 1.6, 2.1, 2.5, 3.2, 4.2, 5.8 and 8.0cc
- **Mounting:** Vertical or Horizontal

TYPICAL APPLICATION:

- **Mobile Lifts**
- **Presses**
- **Compactor**
- **Agricultural Equipment**

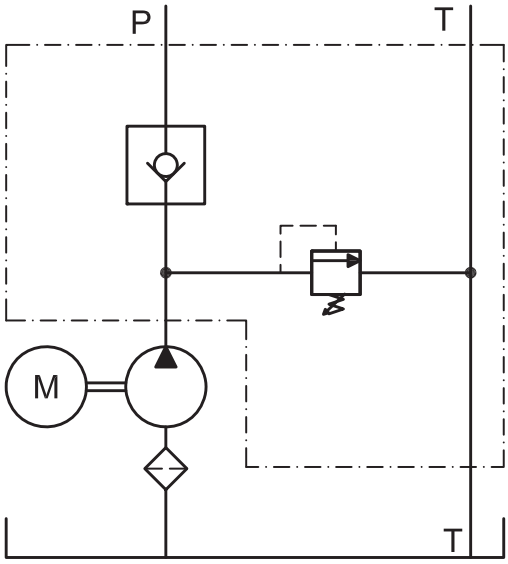

All numbers given are nominal values and should be used for reference only.

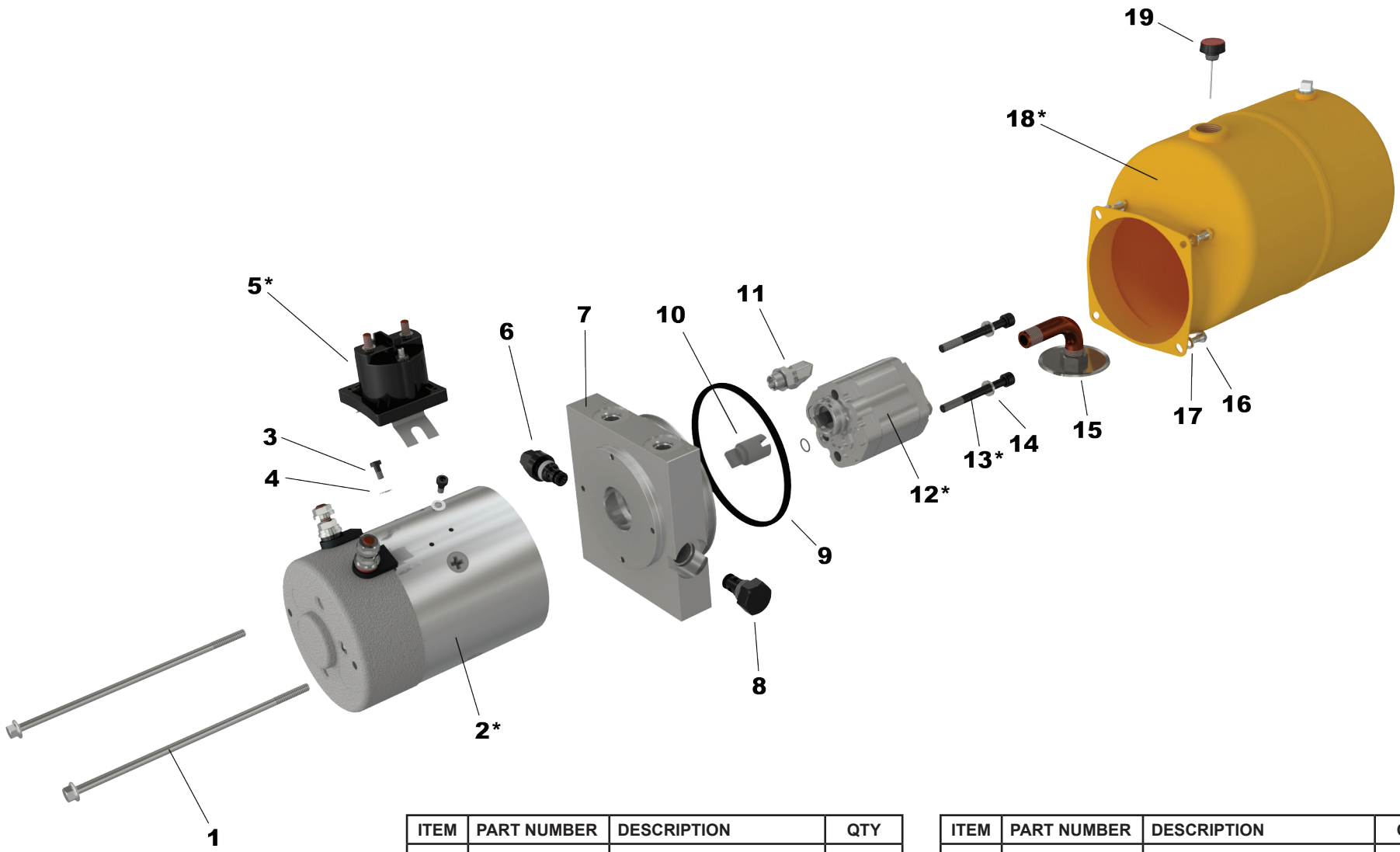

ITEM	PART NUMBER	DESCRIPTION	QTY
1	300060	Motor Bolts	2
2	600xxx*	Motor*	1
3	300010	Solenoid Bolt	2
4	307000	Solenoid Washer	2
5	640xxx*	Solenoid*	1
6	111000	Relief Valve	1
7	210000	Block	1
8	110100	Checkvalve	1
9	330100	Tank O-Ring	1
10	421000	Motor/Pump Coupler	1

ITEM	PART NUMBER	DESCRIPTION	QTY
11	310020	Block Elbow 90°	1
12	400xxx*	Pump*	1
13	301xxx*	Pump Bolts*	2
14	307080	Lockwasher (Pump Bolts)	2
15	150012	Screen Filter Suction Elbow	1
16	300030	Tank Bolts	4
17	307050	Lockwasher (Tank Bolts)	4
18	500xxx*	Tank*	1
19	520030	Breather	1

* items such as motor, pump, pump bolts, coils, solenoid and tank have different ordering part numbers depending on option purchased originally. Always specify model number and serial number when ordering power unit parts

POWER UNIT / UNITÉS DE PUISSANCE

MODEL 02

SHOWN HERE WITH MANUAL HAND PUMP OPTION

This power unit has a single acting circuit with two SAE#6 (9/16-18) ports for staight or 90° hose connection option. The 2 position/2 way cartridge has a manual override and internal check. This circuit design also utilize a cartridge check and adjustable relief valve. The magnetic two button remote control comes with holder and 6 meter of cable, which has a quick connection at the motor. The gear pump is equipped with a suction screen attach to a 90° elbow inside the tank which comes with a 3/4" NPT breather/dipstick.

OPTIONS:

- **Motor:** DC 12 & 24v, or AC 115/230V, single phase or AC 230/460/575V three phase
- **Tank:** From 1.7 liters to 23.5 liters. Plastic or Steel
- **Pump:** 0.8, 1.0, 1.3, 1.6, 2.1, 2.5, 3.2, 4.2, 5.8 and 8.0cc
- **Mounting:** Vertical or Horizontal
- 10' remote control cable extension
- **10cc Manual Hand Pump:** Only 1 outlet port with this option

TYPICAL APPLICATION:

- **Pressure Up / Gravity Down System**
- **Tailgate (with pressure comp. flow control)**
- **Dump Trailer**
- **Single Acting Telescopic Cylinders**
- **Scissor Lift**
- **Carlift**

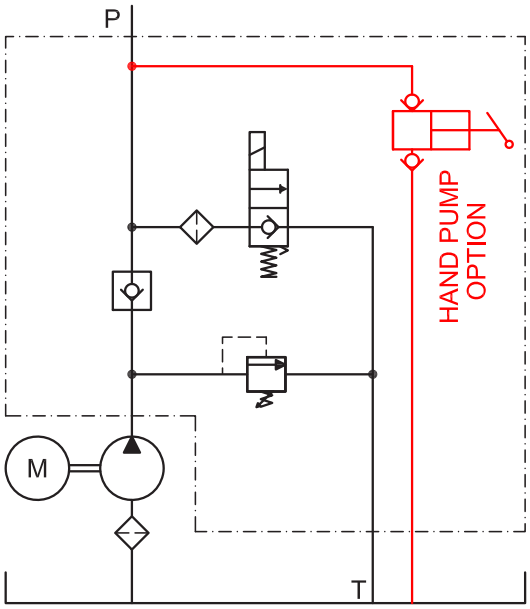

All numbers given are nominal values and should be used for reference only.

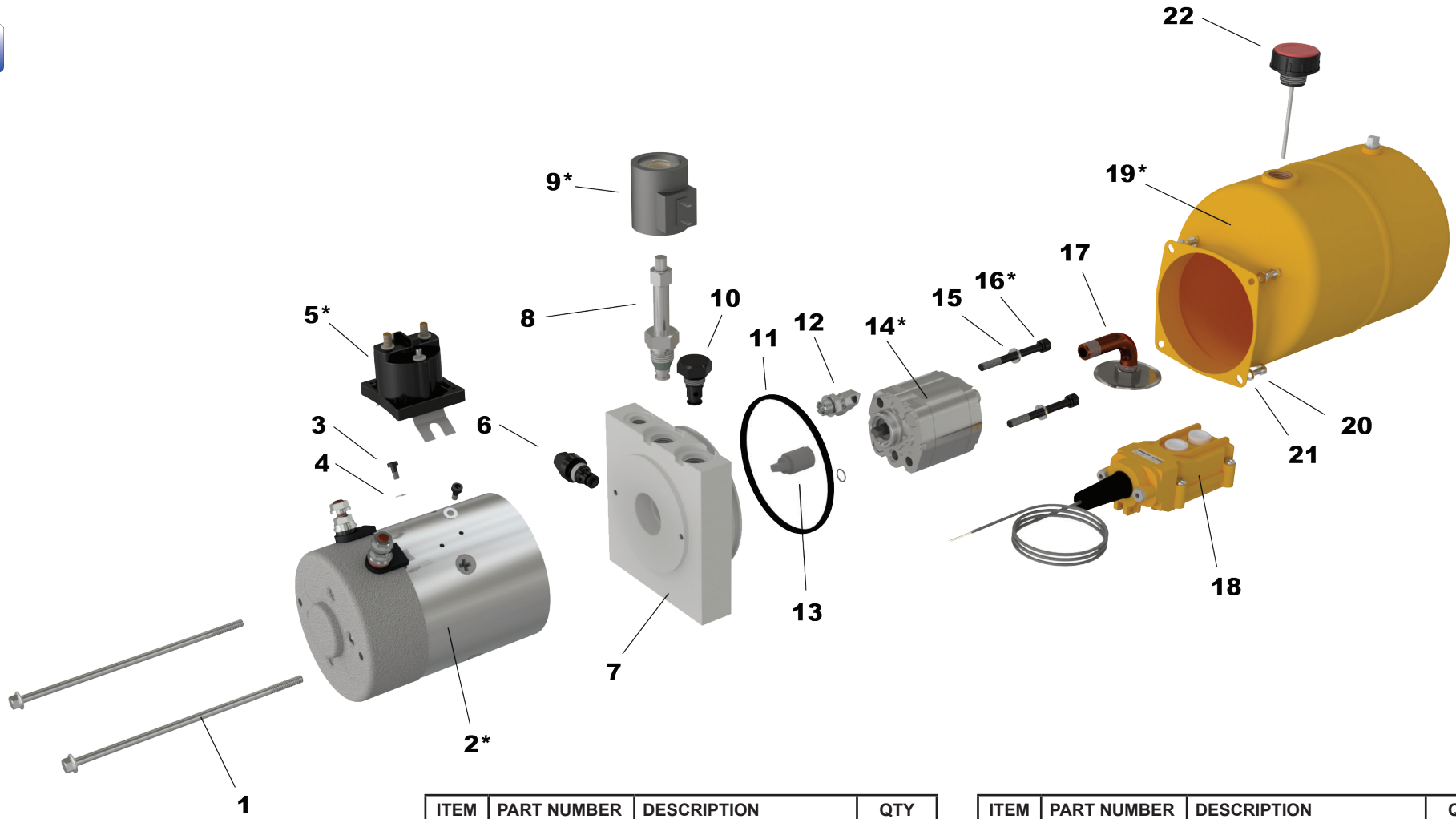

ITEM	PART NUMBER	DESCRIPTION	QTY
1	300060	Motor Bolts	2
2	600xxx*	Motor*	1
3	300010	Solenoid Bolt	2
4	307000	Solenoid Washer	2
5	640xxx*	Solenoid*	1
6	111000	Relief Valve	1
7	210020	Block	1
8	115200	Valve w/ manual override	1
9	641xxx*	Coil*	1
10	110100	Checkvalve	1
11	330100	Block O-Ring	1
12	310020	Block Elbow 90°	1

ITEM	PART NUMBER	DESCRIPTION	QTY
13	421000	Motor/Pump Coupler	1
14	400xxx*	Pump*	1
15	307080	Lockwasher (Pump Bolts)	2
16	301xxx*	Pump Bolts*	2
17	150012	Screen Filter Suction Elbow	1
18	630140	Remote Control	1
19	500xxx*	Tank*	1
20	300030	Tank Bolt	4
21	307050	Lockwasher (Tank Bolt)	4
22	520030	Breather	1

* items such as motor, pump, pump bolts, coils, solenoid and tank have different ordering part numbers depending on option purchased originally. Always specify model number and serial number when ordering power unit parts

POWER UNIT / UNITÉS DE PUISSANCE

MODEL 03

This power unit has a single acting circuit with two SAE#6 (9/16-18) ports for staight or 90° hose connection option. 2 position/2 way manual valve with internal check. This circuit design also utilise a cartridge check and adjustable relief valve. The gear pump is equiped with a suction screen attach to a 90° elbow inside the tank which comes with a 3/4" NPT breather/dipstick.

OPTIONS:

- **Motor:** DC 12 & 24v, or AC 115/230V, single phase or AC 230/460/575V three phase
- **Tank:** From 1.7 liters to 23.5 liters. Plastic or Steel
- **Pump:** 0.8, 1.0, 1.3, 1.6, 2.1, 2.5, 3.2, 4.2, 5.8 and 8.0cc
- **Mounting:** Vertical or Horizontal
- **10cc Manual Hand Pump:** Only 1 outlet port with this option

TYPICAL APPLICATION:

- **Pressure Up / Gravity Down System**
- **Dump Trailer**
- **Single Acting Telescopic Cylinders**
- **Scissor Lift**
- **Carlift**

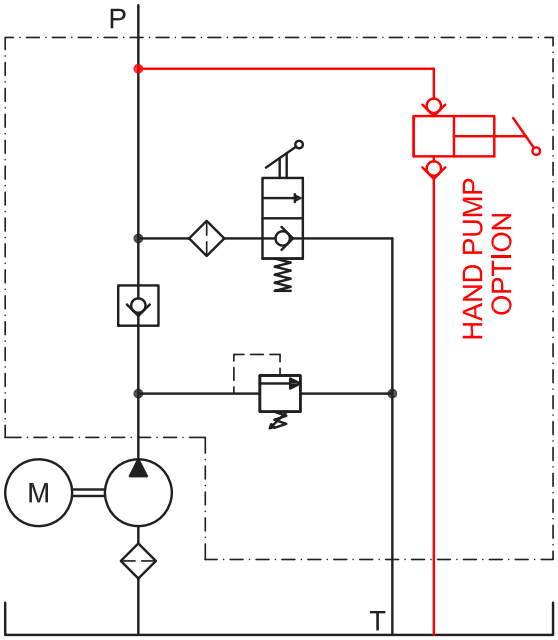

All numbers given are nominal values and should be used for reference only.

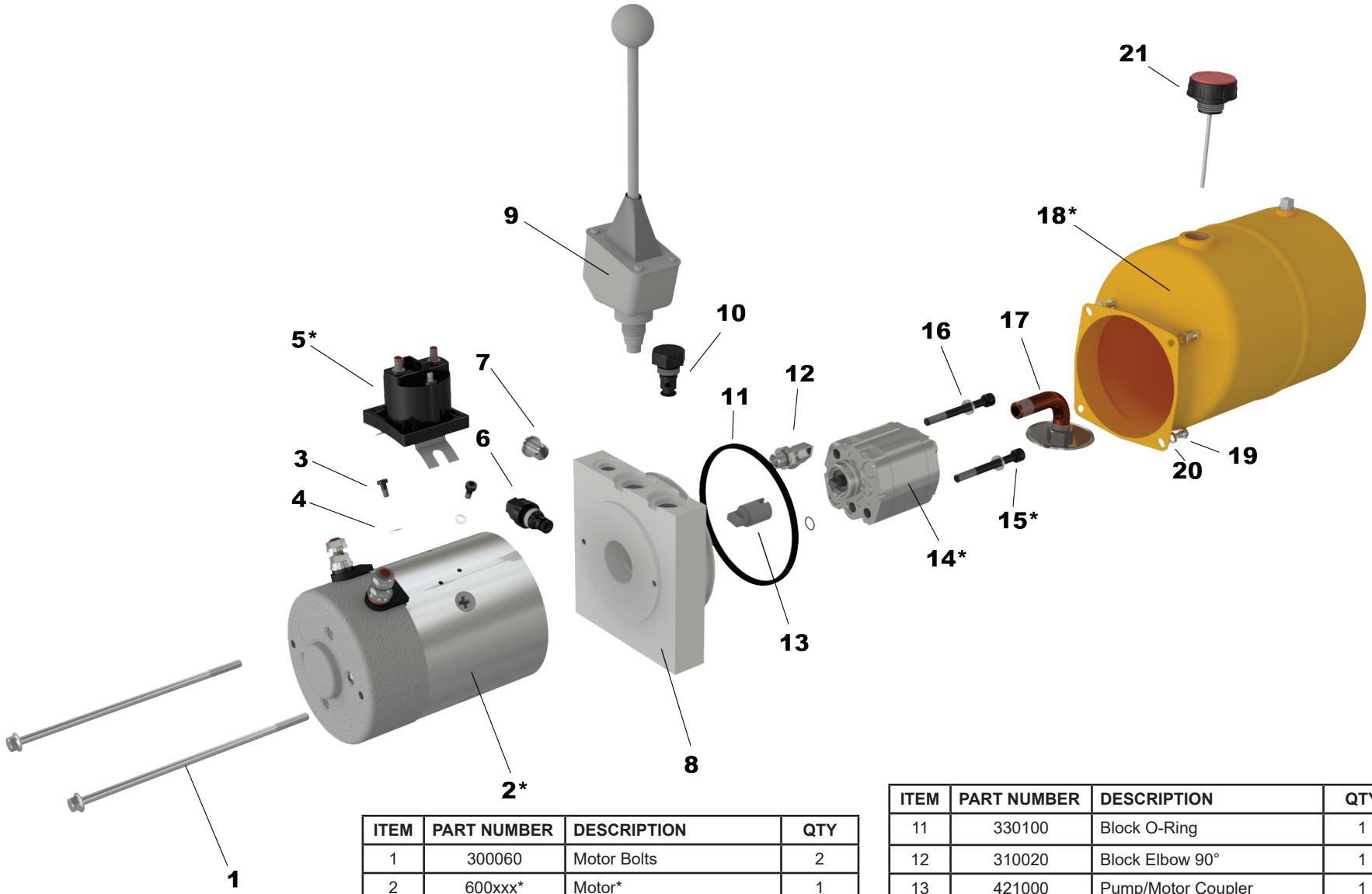

ITEM	PART NUMBER	DESCRIPTION	QTY
1	300060	Motor Bolts	2
2	600xxx*	Motor*	1
3	300010	Solenoid Bolt	2
4	307000	Solenoid Washer	2
5	640xxx*	Solenoid*	1
6	111000	Relief Valve	1
7	315000	Block Plug	1
8	210020	Block	1
9	115230	Manual Valve	1
10	110100	Checkvalve	1

ITEM	PART NUMBER	DESCRIPTION	QTY
11	330100	Block O-Ring	1
12	310020	Block Elbow 90°	1
13	421000	Pump/Motor Coupler	1
14	400xxx*	Pump*	1
15	301xxx*	Pump Bolts*	2
16	307080	Lockwasher (Pump Bolts)	2
17	150012	Screen Filter Suction Elbow	1
18	500xxx*	Tank*	1
19	300030	Tank Bolt	4
20	307050	Lockwasher (Tank Bolt)	4
21	520030	Breather	1

* items such as motor, pump, pump bolts, coils, solenoid and tank have different ordering part numbers depending on option purchased originally. Always specify model number and serial number when ordering power unit parts

POWER UNIT / UNITÉS DE PUISSANCE

MODEL 05

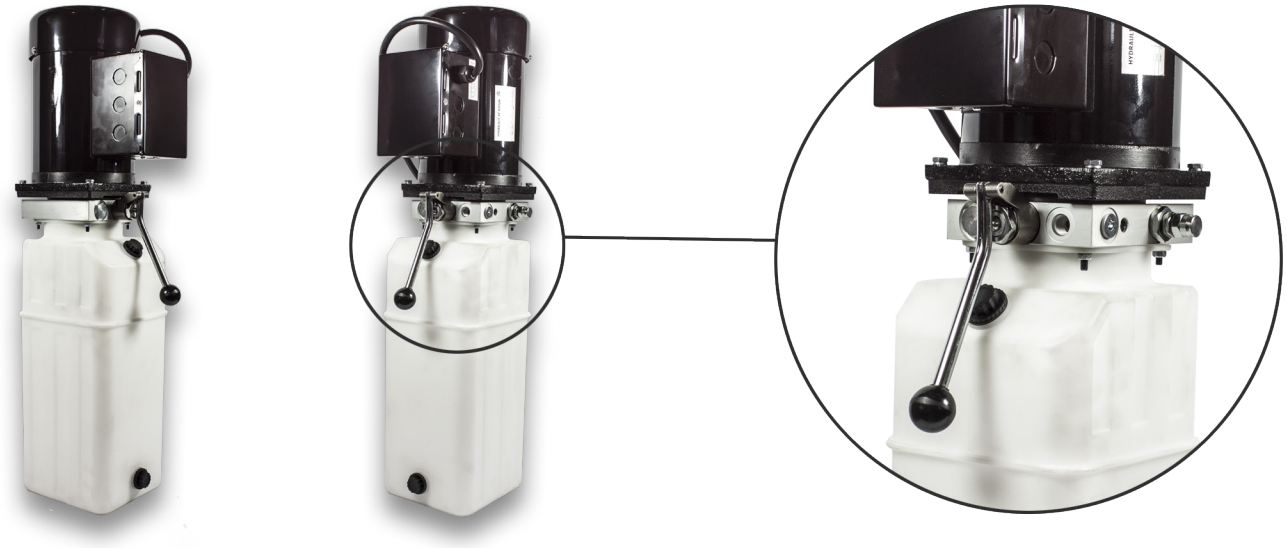

This power unit has a single acting circuit with two SAE#6 (9/16-18) ports for straight or 90° hose connection option. 2 position/2 way manual valve with internal check. This circuit design also utilise a cartridge check and adjustable relief valve. The gear pump is equiped with a suction screen inside the tank which comes with a 3/4" NPT breather/dipstick.

OPTIONS:

- **Motor:** AC 115/230V, single phase
  AC 230/460/575V three phase
- **Tank:** From 1.7 liters to 23.5 liters. Plastic or Steel
- **Pump:** 0.8, 1.0, 1.3, 1.6, 2.1, 2.5, 3.2, 4.2, 5.8 and 8.0cc
- **Mounting:** Vertical

TYPICAL APPLICATION:

- **Pressure Up / Gravity Down System**
- **Single Acting Telescopic Cylinders**
- **Scissor Lift**
- **Carlift**

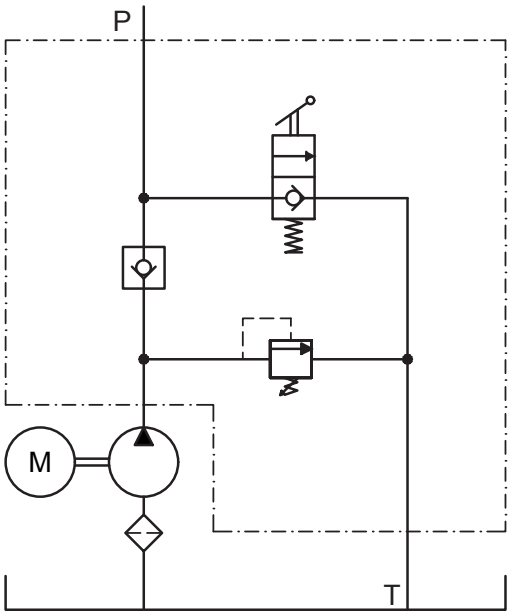

All numbers given are nominal values and should be used for reference only.

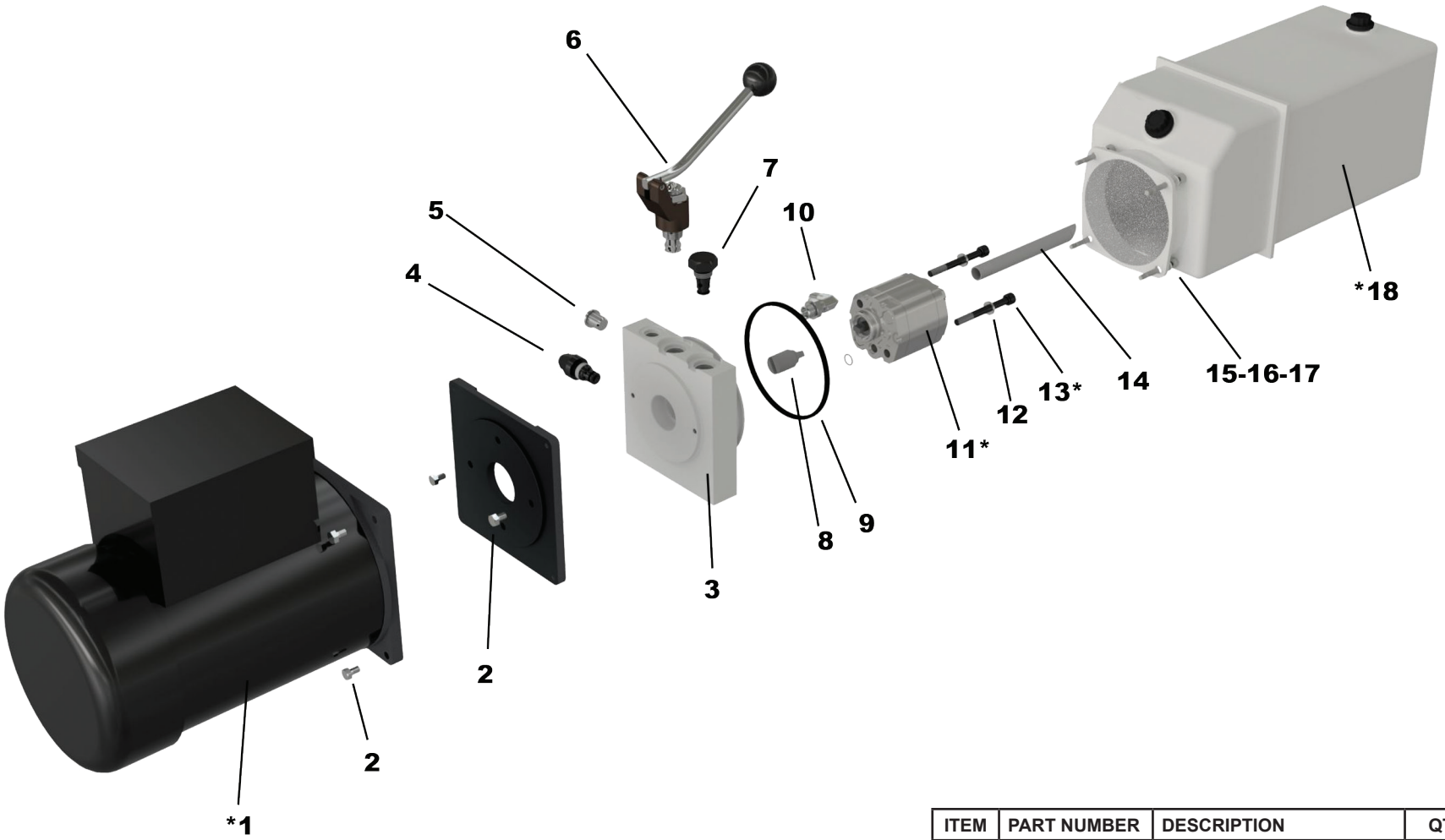

ITEM	PART NUMBER	DESCRIPTION	QTY
1	600xxx*	Motor*	2
2	300070	Motor Bolt	4
3	210020	Block	1
4	111000	Relief Valve	1
5	315000	Block Plug	1
6	115250	Manual Valve	1
7	110100	Checkvalve	1
8	421000	Pump/Motor Coupler	1

ITEM	PART NUMBER	DESCRIPTION	QTY
9	330100	Block O-Ring	1
10	310020	Block Elbow 90°	1
11	400xxx*	Pump*	1
12	307080	Lockwasher (Pu mp Bolts)	2
13	301xxx*	Pump Bolts*	2
14	710035	Suction Tube	1
15	300050	Tank Stud	4
16	307050	Lockwasher (Tank Bolts)	4
17	307100	Tank Stud Nut	4
18	500xxx*	Tank*	1

* items such as motor, pump, pump bolts, coils, solenoid and tank have different ordering part numbers depending on option purchased originally. Always specify model number and serial number when ordering power unit parts

POWER UNIT / UNITÉS DE PUISSANCE

MODEL 06

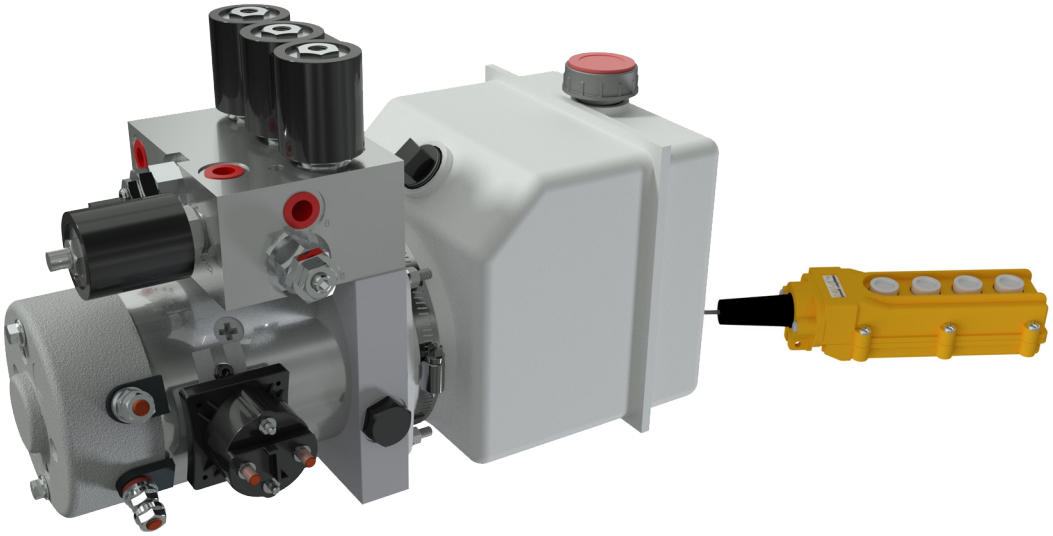

This power unit has a double acting circuit for left and right movement with cross-over relief system and pilot operated check valves. Also a single acting power up with check valve and gravity down circuit as well in a convenient one piece aluminum block. The main housing encloses a check and adjustable relief valve as per our standard. The gear pump is equipped with a suction screen attach to a 90° elbow inside the tank which comes with a 3/4" NPT breather/dipstick. Comes standard with our 4 button remote control.

OPTIONS:

- **Motor:** DC 12 & 24v, std or powder coated long duty in 12v
- **Tank:** From 1.7 liters to 23.5 liters. Plastic or Steel
- **Pump:** 0.8, 1.0, 1.3, 1.6, 2.1, 2.5, 3.2, 4.2, 5.8 and 8.0cc
- **Mounting:** Vertical or Horizontal

TYPICAL APPLICATION:

- **Snow Plow**
- **System requiring Power Up with check, Gravity Down, Left, Right**

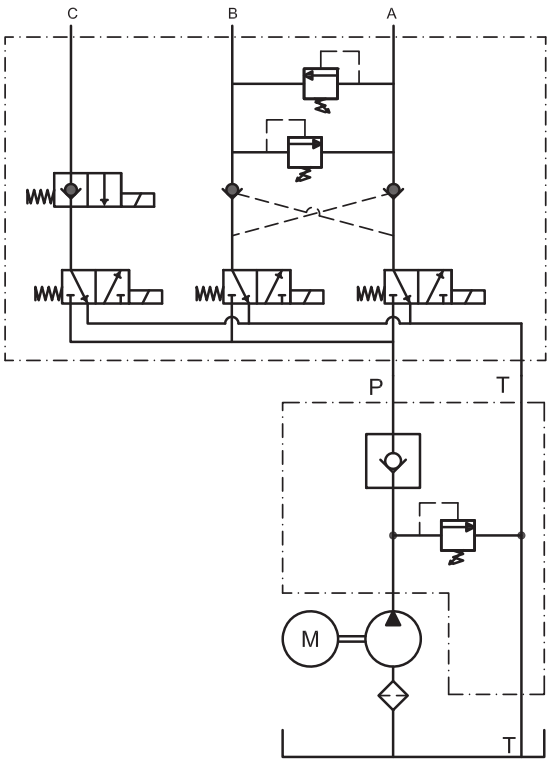

All numbers given are nominal values and should be used for reference only.

ITEM	PART NUMBER	DESCRIPTION	QTY
1	300060	Motor Bolts	2
2	600xxx*	Motor*	1
3	300010	Solenoid Bolt	2
4	307000	Solenoid Washer	2
5	640xxx*	Solenoid*	1
6	210150	Block	1
7	110100	Checkvalve	1
8	111000	Relief Valve	1
9	421000	Pump/Motor Coupler	1
10	330100	Tank O-Ring	1
11	310020	Block Elbow 90°	1
12	400xxx*	Pump*	1
13	301xxx*	Pump Bolts*	2
14	307080	Lockwasher (Pump Bolts)	2
15	300050	Tank Stud	4
16	300045	Tank Washer	4
17	307050	Tank Lockwasher	4
18	307100	Tank Hex. Nut	4

* items such as motor, pump, pump bolts, coils, solenoid and tank have different ordering part numbers depending on option purchased originally. Always specify model number and serial number when ordering power unit parts

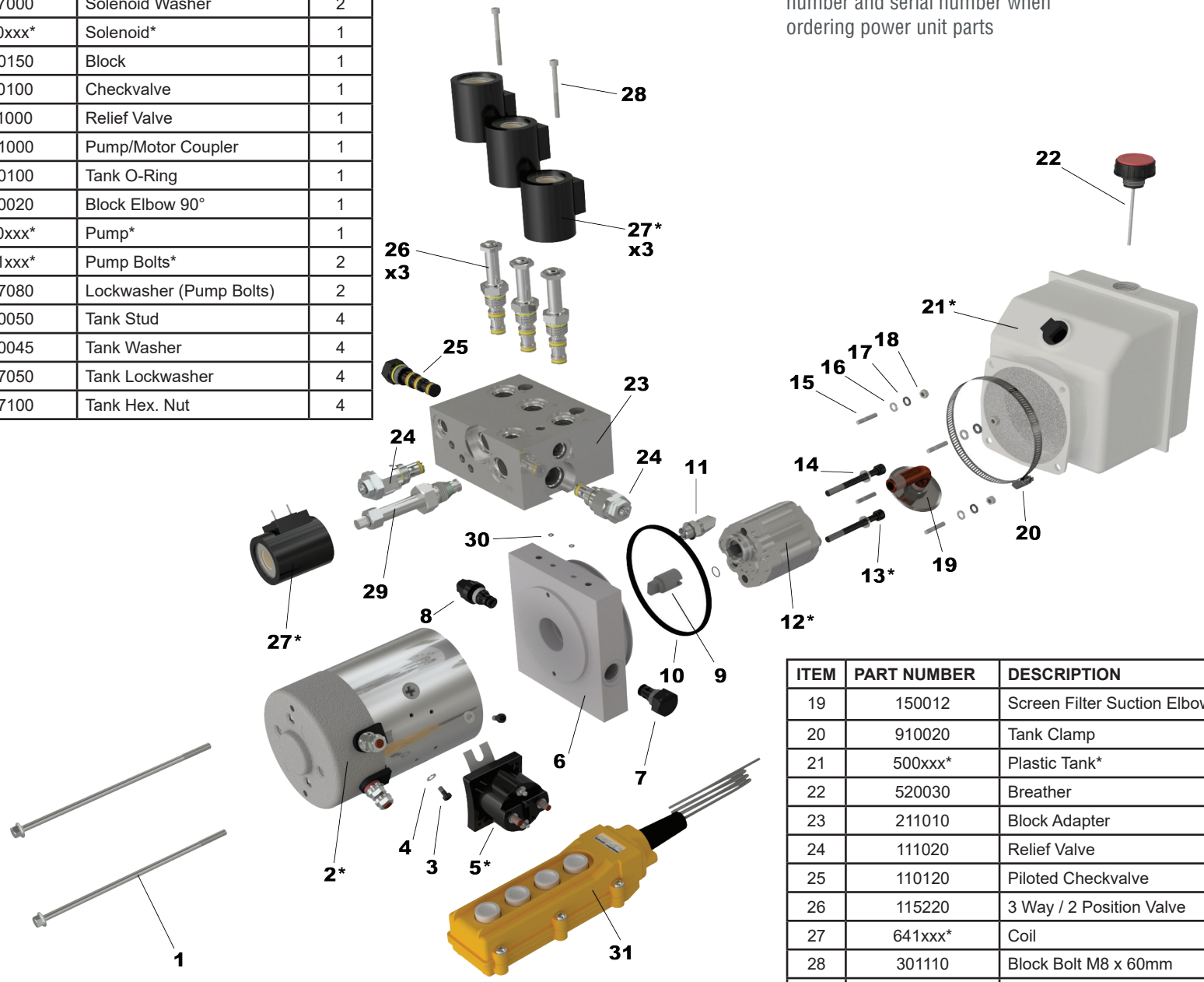

ITEM	PART NUMBER	DESCRIPTION	QTY
19	150012	Screen Filter Suction Elbow	1
20	910020	Tank Clamp	1
21	500xxx*	Plastic Tank*	1
22	520030	Breather	1
23	211010	Block Adapter	1
24	111020	Relief Valve	2
25	110120	Piloted Checkvalve	1
26	115220	3 Way / 2 Position Valve	3
27	641xxx*	Coil	4
28	301110	Block Bolt M8 x 60mm	2
29	115200	Valve w/ Manual Override	1
30	330110	Block O-Ring	2
31	630170	Remote Control	1

POWER UNIT / UNITÉS DE PUISSANCE

MODEL 10

This power unit has a double acting circuit with SAE#6 (9/16-18) A & B ports. The 2 position/2 way cartridge has an internal piloted check valve to prevent internal bypass and maintain constant pressure. This circuit design also utilize a cartridge check and adjustable relief valve on the main and B port. The magnetic two button remote control comes with holder and 6 meter of cable, which has a quick connection at the motor. The gear pump is equipped with a suction screen attach to a 90° elbow inside the tank which comes with a 3/4" NPT breather/dipstick.

OPTIONS:

- **Motor:** DC 12 & 24v, or AC 115/230V, single phase or AC 230/460/575V three phase
- **Tank:** From 1.7 liters to 23.5 liters. Plastic or Steel
- **Pump:** 0.8, 1.0, 1.3, 1.6, 2.1, 2.5, 3.2, 4.2, 5.8 and 8.0cc
- 10' remote control cable extension
- **Mounting:** Vertical or Horizontal

TYPICAL APPLICATION:

- **Power Up / Power Down System**
- **Tailgate (with pressure comp. flow control)**
- **Dump Trailer**
- **Compactor**
- **Presses**
- **Lift Equipment**

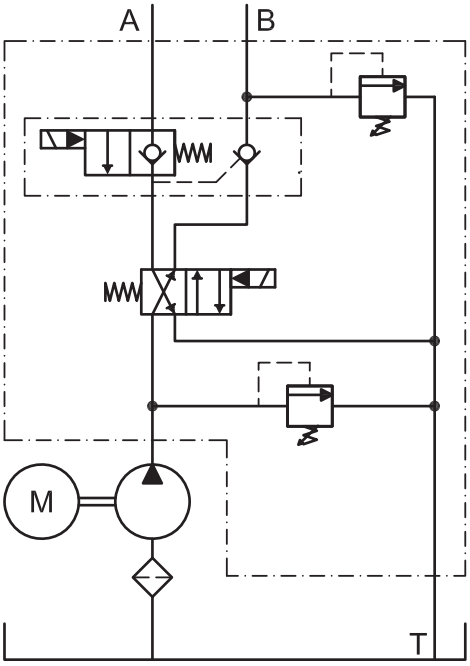

All numbers given are nominal values and should be used for reference only.

* items such as motor, pump, pump bolts, coils, solenoid and tank have different ordering part numbers depending on option purchased originally. Always specify model number and serial number when ordering power unit parts

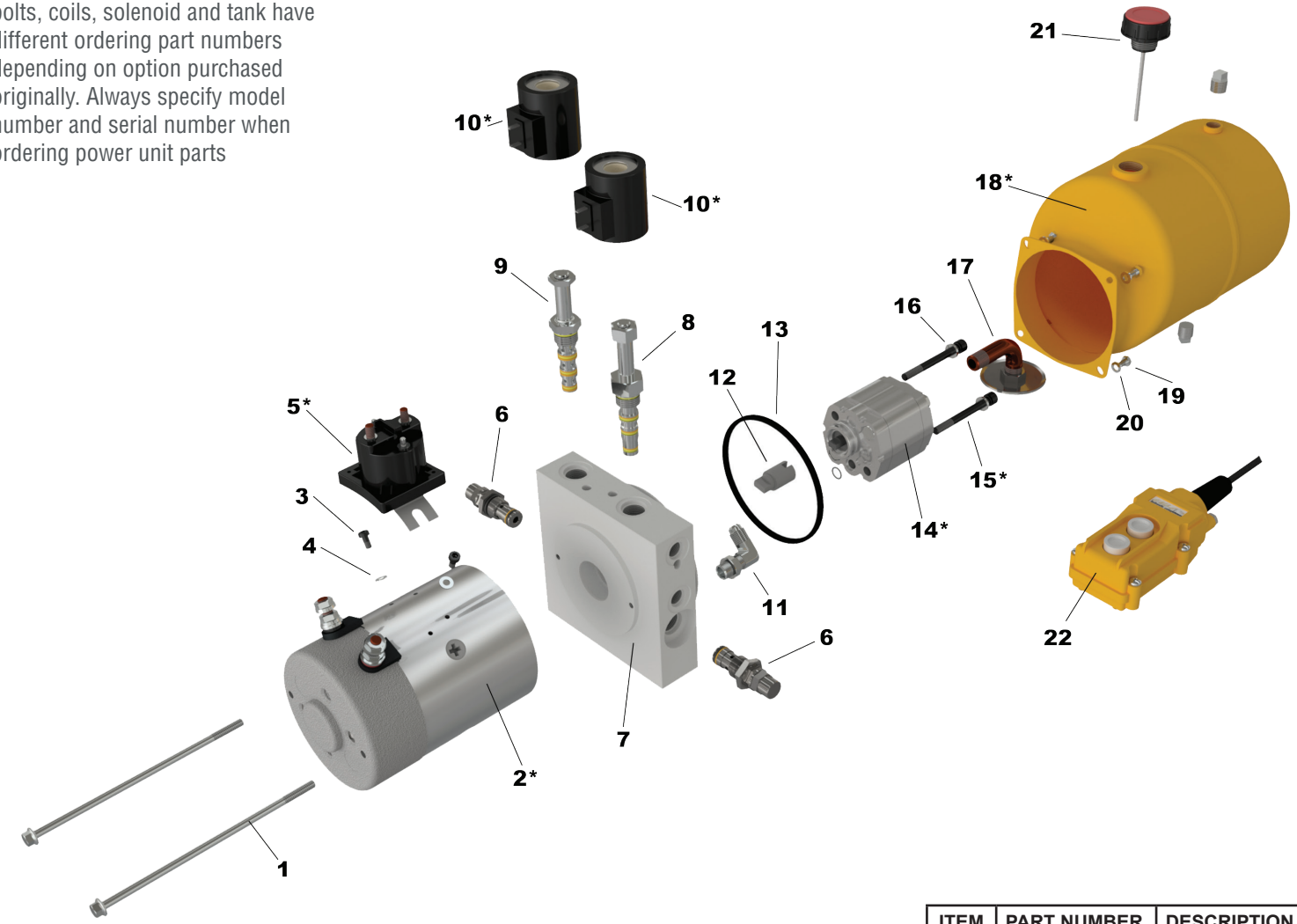

ITEM	PART NUMBER	DESCRIPTION	QTY
1	300060	Motor Bolts	2
2	600xxx*	Motor*	1
3	300010	Solenoid Bolt	2
4	307000	Solenoid Washer	2
5	640xxx*	Solenoid*	1
6	111000	Relief Valve	2
7	210090	Block	1
8	115310	2 Way / 2 Position Valve	1
9	115300	4 Way / 2 Position Valve	1
10	641xxx*	Coil	2

ITEM	PART NUMBER	DESCRIPTION	QTY
11	310020	Block Elbow 90°	1
12	421000	Pump/Motor Coupler	1
13	330100	Tank O-Ring	1
14	400xxx*	Pump*	1
15	301xxx*	Pump Bolt*	2
16	307080	Lockwasher (Pump Bolt)	2
17	150012	Screen Filter Suction Elbow	1
18	500xxx*	Tank*	1
19	300030	Tank Bolt	4
20	307050	Lockwasher (Tank Bolt)	4
21	520030	Breather	1
22	630060	Remote Control	1

MODEL 11

This power unit has a double acting circuit with SAE#6 (9/16-18) A & B ports. The 2 position/2 way cartridge has an internal piloted check valve to prevent internal bypass and maintain constant pressure. This circuit design also utilize a cartridge check and adjustable relief valve on the main and internal B port. The magnetic two button remote control comes with holder and 6 meter of cable, which has a quick connection at the motor. The gear pump is equipped with a suction screen attach to a 90° elbow inside the tank which comes with a 3/4" NPT breather/dipstick.

OPTIONS:

- **Motor:** DC 12 & 24v, or AC 115/230V, single phase or AC 230/460/575V three phase
- **Tank:** From 1.7 liters to 23.5 liters. Plastic or Steel
- **Pump:** 0.8, 1.0, 1.3, 1.6, 2.1, 2.5, 3.2, 4.2, 5.8 and 8.0cc
- 10' remote control cable extension
- **Mounting:** Vertical or Horizontal

TYPICAL APPLICATION:

- **Power Up / Power Down System**
- **Tailgate (with pressure comp. flow control)**
- **Dump Trailer**
- **Compactor**
- **Presses**
- **Lift Equipment**

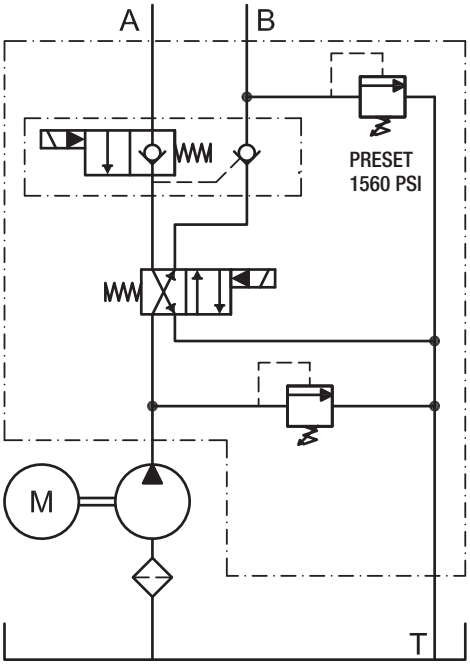

All numbers given are nominal values and should be used for reference only.

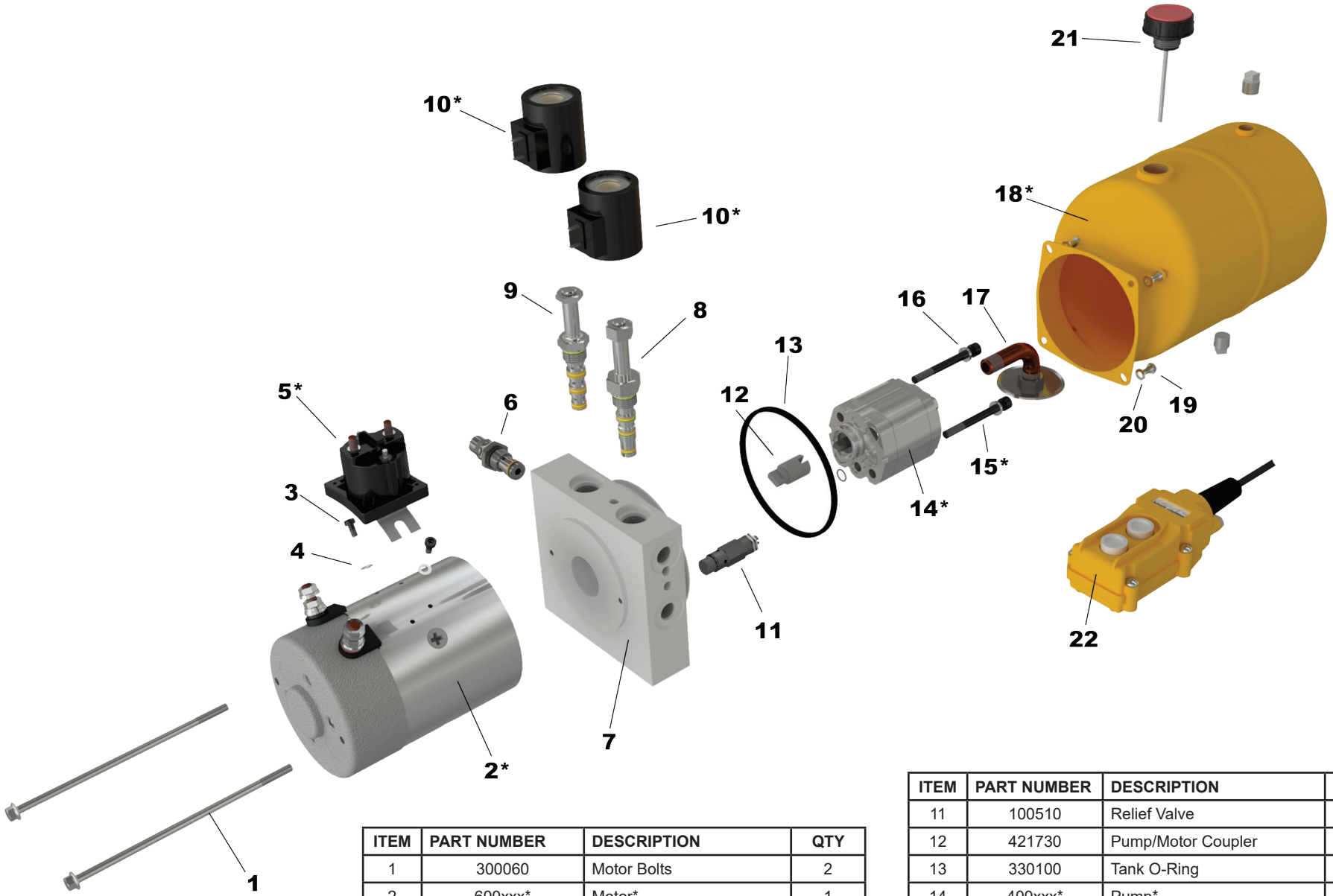

ITEM	PART NUMBER	DESCRIPTION	QTY
1	300060	Motor Bolts	2
2	600xxx*	Motor*	1
3	300010	Solenoid Bolt	2
4	307000	Solenoid Washer	2
5	640xxx*	Solenoid*	1
6	111000	Relief Valve	1
7	210080	Block	1
8	115310	2 Way / 2 Position Valve	1
9	115300	4 Way / 2 Position Valve	1
10	641xxx*	Coil	2

ITEM	PART NUMBER	DESCRIPTION	QTY
11	100510	Relief Valve	1
12	421730	Pump/Motor Coupler	1
13	330100	Tank O-Ring	1
14	400xxx*	Pump*	1
15	301xxx*	Pump Bolt*	2
16	307080	Lockwasher (Pump Bolt)	2
17	150012	Screen Filter Suction Elbow	1
18	500xxx*	Tank*	1
19	300030	Tank Bolt	4
20	307050	Lockwasher (Tank Bolt)	4
21	520030	Breather	1
22	630060	Remote Control	1

* items such as motor, pump, pump bolts, coils, solenoid and tank have different ordering part numbers depending on option purchased originally. Always specify model number and serial number when ordering power unit parts

POWER UNIT / UNITÉS DE PUISSANCE

MODEL 12

This power unit has a double acting circuit with SAE#6 (9/16-18) A & B ports.3 position/4 way modular valve (D03) that can be combined with other modular options such as piloted check valves, flow control or even port pressure relief (See P.6 in accessories catalogue).This circuit design also utilize a cartridge check and adjustable relief valve. The magnetic two button remote control comes with holder and 6 meter of cable, which has a quick connection at the motor. The gear pump is equipped with a suction screen attach to a 90° elbow inside the tank which comes with a 3/4" NPT breather/dipstick.

OPTIONS:

- **Motor:** DC 12 & 24v, or AC 115/230V, single phase or AC 230/460/575V three phase
- **Tank:** From 1.7 liters to 23.5 liters. Plastic or Steel
- **Pump:** 0.8, 1.0, 1.3, 1.6, 2.1, 2.5, 3.2, 4.2, 5.8 and 8.0cc
- 10' remote control cable extension
- **Mounting:** Vertical or Horizontal

TYPICAL APPLICATION:

- **Power Up / Power Down System**
- **Dump Trailer**
- **Compactor**
- **Presses**

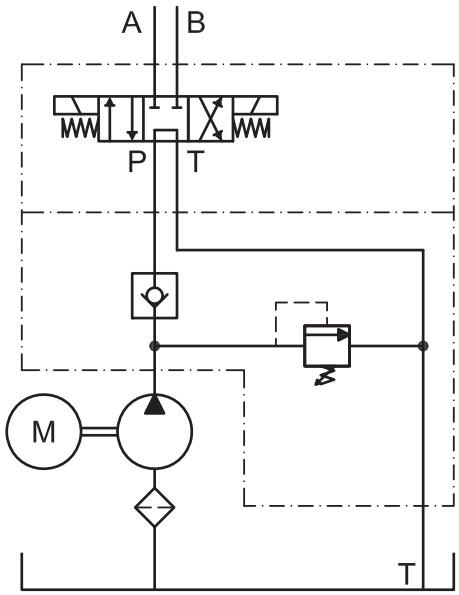

All numbers given are nominal values and should be used for reference only.

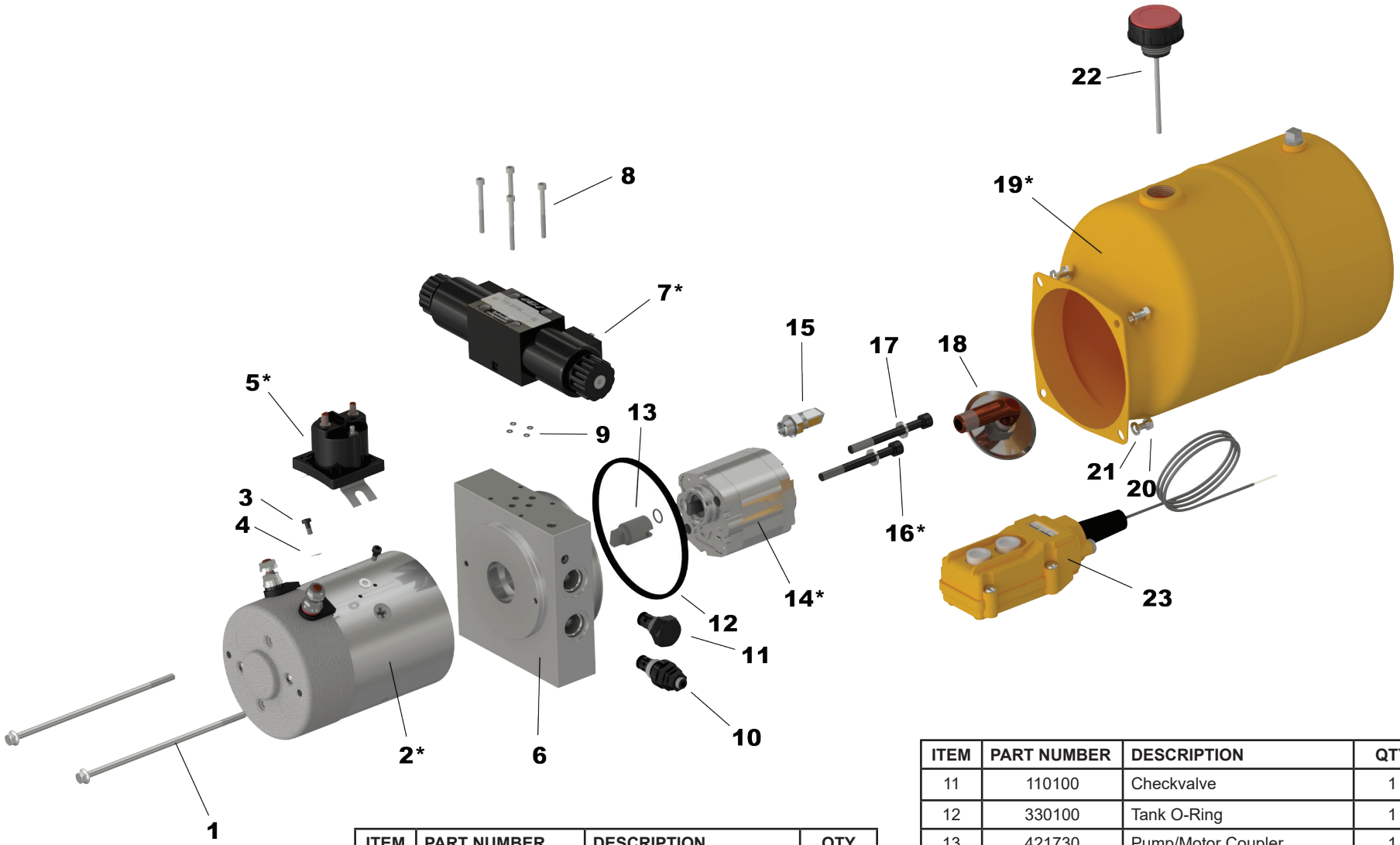

ITEM	PART NUMBER	DESCRIPTION	QTY
1	300060	Motor Bolts	2
2	600xxx*	Motor*	1
3	300010	Solenoid Bolt	2
4	307000	Solenoid Washer	2
5	640xxx*	Solenoid*	1
6	210050	Block	1
7	122xxx*	Solenoid Valve D03*	1
8	300500	Valve Bolts	4
9	330110	Valve O-Ring	4
10	111000	Relief Valve	1

ITEM	PART NUMBER	DESCRIPTION	QTY
11	110100	Checkvalve	1
12	330100	Tank O-Ring	1
13	421730	Pump/Motor Coupler	1
14	400xxx*	Pump*	1
15	310020	Block Elbow 90°	1
16	301xxx*	Pump Bolt*	2
17	307080	Lockwasher (Pump Bolt)	2
18	150012	Screen Filter Suction Elbow	1
19	500xxx*	Tank*	1
20	300030	Tank Bolt	4
21	307050	Lockwasher (Tank Bolt)	4
22	520030	Breather	1
23	630060	Remote Control	1

* items such as motor, pump, pump bolts, coils, solenoid and tank have different ordering part numbers depending on option purchased originally. Always specify model number and serial number when ordering power unit parts

MODEL 14

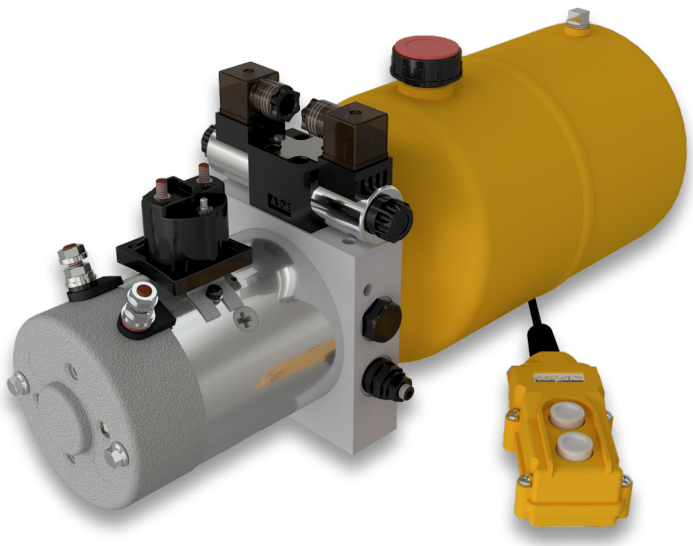

This power unit has a double acting circuit with SAE#6 (9/16-18) A & B ports.3 position/4 way modular valve (D02) that can be combined with other modular options such as piloted check valves, flow control or even port pressure relief (See P.6 in accessories catalogue).This circuit design also utilize a cartridge check and adjustable relief valve. The magnetic two button remote control comes with holder and 6 meter of cable, which has a quick connection at the motor. The gear pump is equipped with a suction screen attach to a 90° elbow inside the tank which comes with a 3/4" NPT breather/dipstick.

OPTIONS:

- **Motor:** DC 12 & 24v, or AC 115/230V, single phase or AC 230/460/575V three phase
- **Tank:** From 1.7 liters to 23.5 liters. Plastic or Steel
- **Pump:** 0.8, 1.0, 1.3, 1.6, 2.1, 2.5, 3.2, 4.2, 5.8 and 8.0cc
- 10' remote control cable extension
- **Mounting:** Vertical or Horizontal

TYPICAL APPLICATION:

- **Power Up / Power Down System**
- **Dump Trailer**
- **Compactor**
- **Presses**

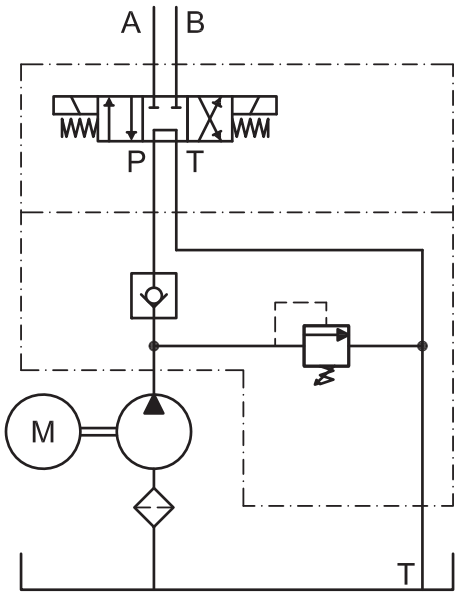

All numbers given are nominal values and should be used for reference only.

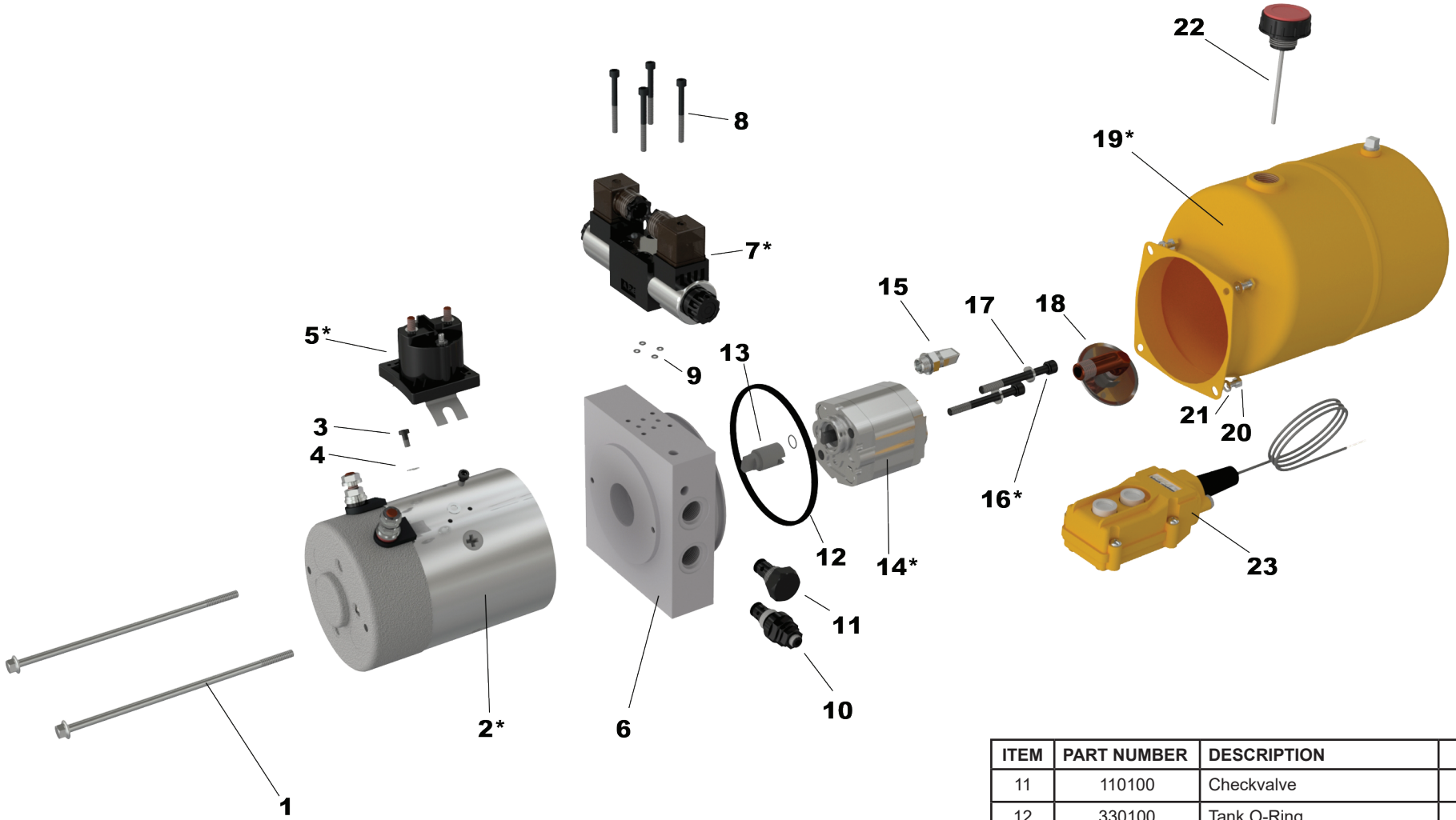

ITEM	PART NUMBER	DESCRIPTION	QTY
1	300060	Motor Bolts	2
2	600xxx*	Motor*	1
3	300010	Solenoid Bolt	2
4	307000	Solenoid Washer	2
5	640xxx*	Solenoid*	1
6	210140	Block	1
7	121xxx*	Solenoid Valve D02*	1
8	300500	Valve Bolts	4
9	330130	Valve O-Ring	4
10	111000	Relief Valve	1

ITEM	PART NUMBER	DESCRIPTION	QTY
11	110100	Checkvalve	1
12	330100	Tank O-Ring	1
13	421730	Pump/Motor Coupler	1
14	400xxx*	Pump*	1
15	310020	Block Elbow 90°	1
16	301xxx*	Pump Bolt*	2
17	307080	Lockwasher (Pump Bolt)	2
18	150012	Screen Filter Suction Elbow	1
19	500xxx*	Tank*	1
20	300030	Tank Bolt	4
21	307050	Lockwasher (Tank Bolt)	4
22	520030	Breather	1
23	630060	Remote Control	1

* items such as motor, pump, pump bolts, coils, solenoid and tank have different ordering part numbers depending on option purchased originally. Always specify model number and serial number when ordering power unit parts

MODEL 15

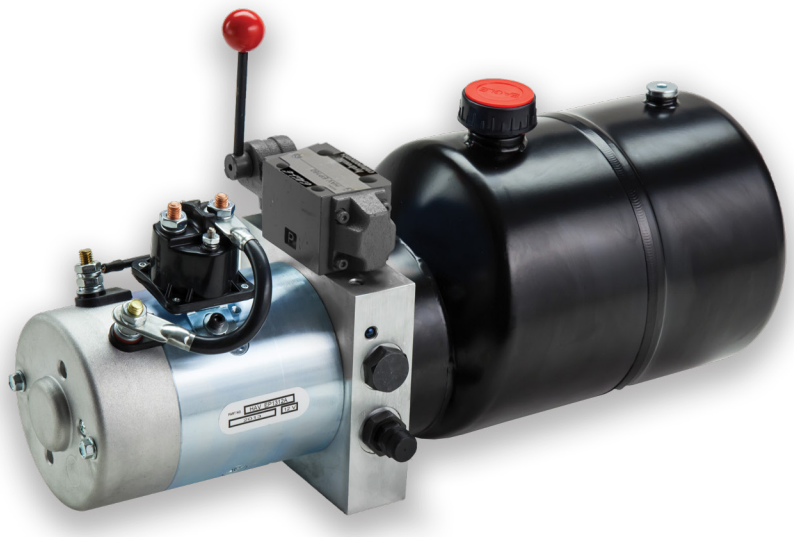

This power unit has a double acting circuit with SAE#6 (9/16-18) A & B ports.3 position/4 way manual modular valve (D03) without integrated micro switch, that can be combined with other modular options such as piloted check valves, flow control or even port pressure relief (See accessories catalogue). This circuit design utilize a cartridge check and adjustable relief valve. The gear pump is equipped with a suction screen attached to a 90° elbow inside the tank which comes with a 3/4" NPT breather/dipstick.

OPTIONS:

- **Motor:** DC 12 & 24v, or AC 115/230V, single phase or AC 230/460/575V three phase
- **Tank:** From 1.7 liters to 23.5 liters. Plastic or Steel
- **Pump:** 0.8, 1.0, 1.3, 1.6, 2.1, 2.5, 3.2, 4.2, 5.8 and 8.0cc
- **Mounting:** Vertical or Horizontal

TYPICAL APPLICATION:

- **Power Up / Power Down System**
- **Compactor**
- **Presses**

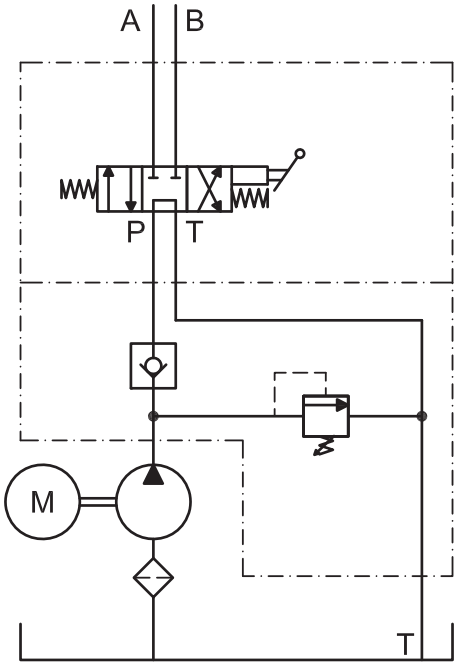

All numbers given are nominal values and should be used for reference only.

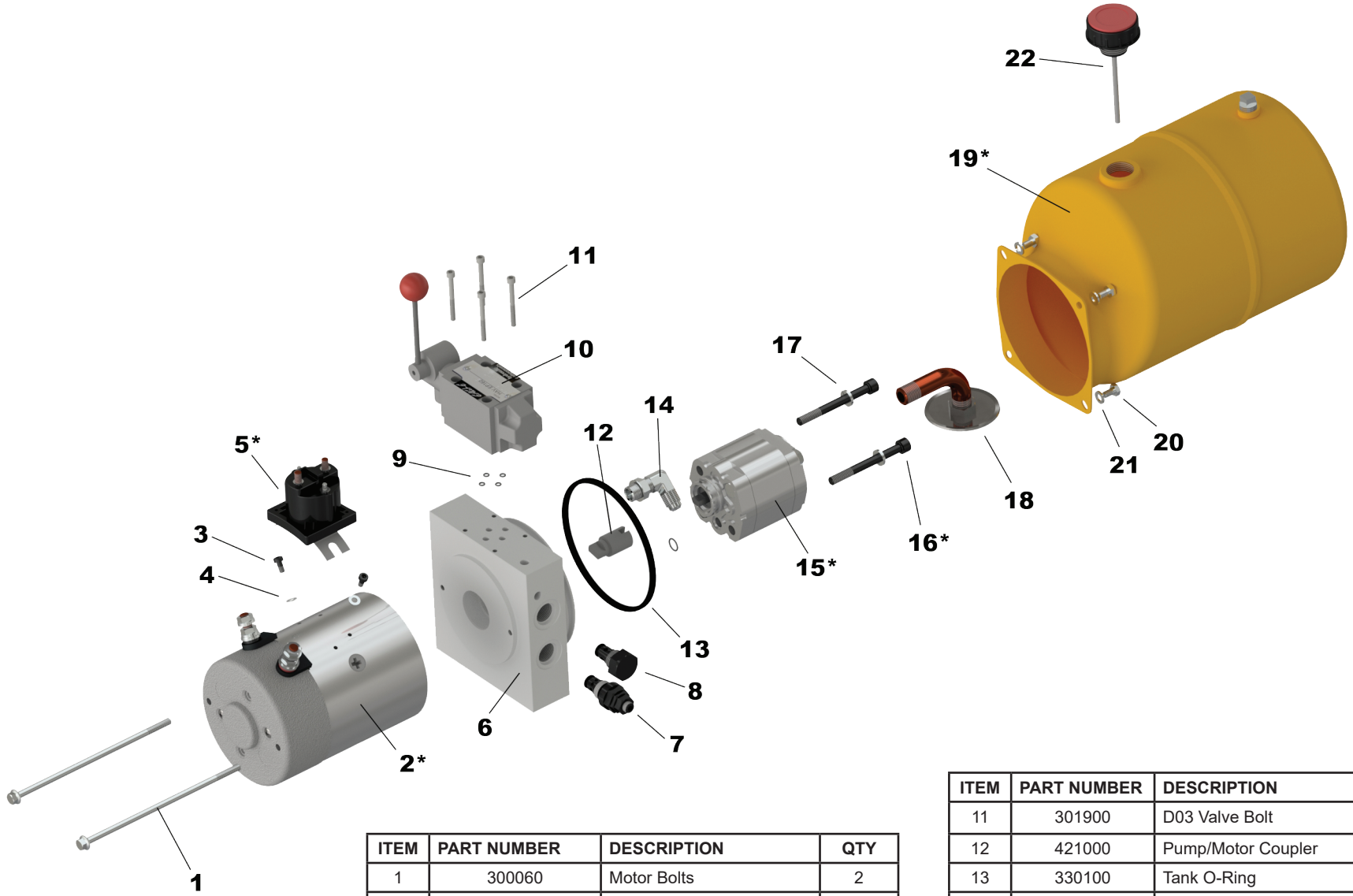

* items such as motor, pump, pump bolts, coils, solenoid and tank have different ordering part numbers depending on option purchased originally. Always specify model number and serial number when ordering power unit parts

ITEM	PART NUMBER	DESCRIPTION	QTY
1	300060	Motor Bolts	2
2	600xxx*	Motor*	1
3	300010	Solenoid Bolt	2
4	307000	Solenoid Washer	2
5	640xxx*	Solenoid*	1
6	210050	Block	1
7	111000	Relief Valve	1
8	110100	Checkvalve	1
9	330110	Valve O-Ring	4
10	122010	D03 Manual Valve	1

ITEM	PART NUMBER	DESCRIPTION	QTY
11	301900	D03 Valve Bolt	4
12	421000	Pump/Motor Coupler	1
13	330100	Tank O-Ring	1
14	310020	Block Elbow 90°	1
15	400xxx*	Pump*	1
16	301xxx*	Pump Bolt*	2
17	307080	Lockwasher (Pump Bolt)	2
18	150012	Screen Filter Suction Elbow	1
19	500xxx*	Tank	1
20	300030	Tank Bolt	4
21	307050	Lockwasher (Tank Bolt)	4
22	520030	Breather	1

MODEL 16

This power unit has a double acting circuit with SAE#6 (9/16-18) A & B ports.3 position/4 way manual modular valve (D02), that can be combined with other modular options such as piloted check valves, flow control or even port pressure relief (See accessories catalogue). This circuit design utilize a cartridge check and adjustable relief valve. The gear pump is equipped with a suction screen attached to a 90° elbow inside the tank which comes with a 3/4" NPT breather/dipstick.

OPTIONS:

- **Motor:** DC 12 & 24v, or AC 115/230V, single phase or AC 230/460/575V three phase
- **Tank:** From 1.7 liters to 23.5 liters. Plastic or Steel
- **Pump:** 0.8, 1.0, 1.3, 1.6, 2.1, 2.5, 3.2, 4.2, 5.8 and 8.0cc
- **Mounting:** Vertical or Horizontal

TYPICAL APPLICATION:

- **Power Up / Power Down System**
- **Compactor**
- **Presses**

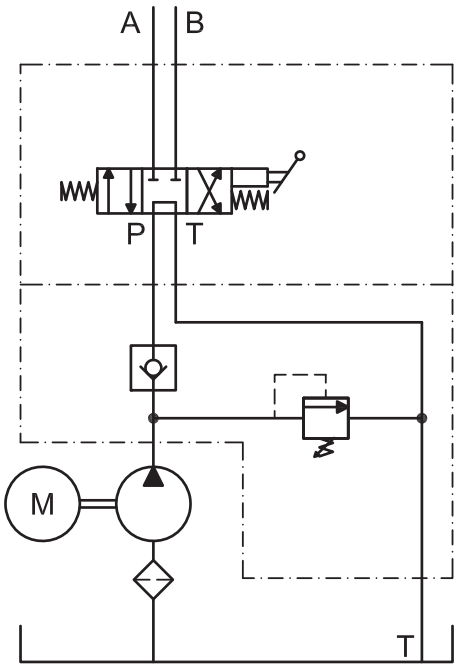

All numbers given are nominal values and should be used for reference only.

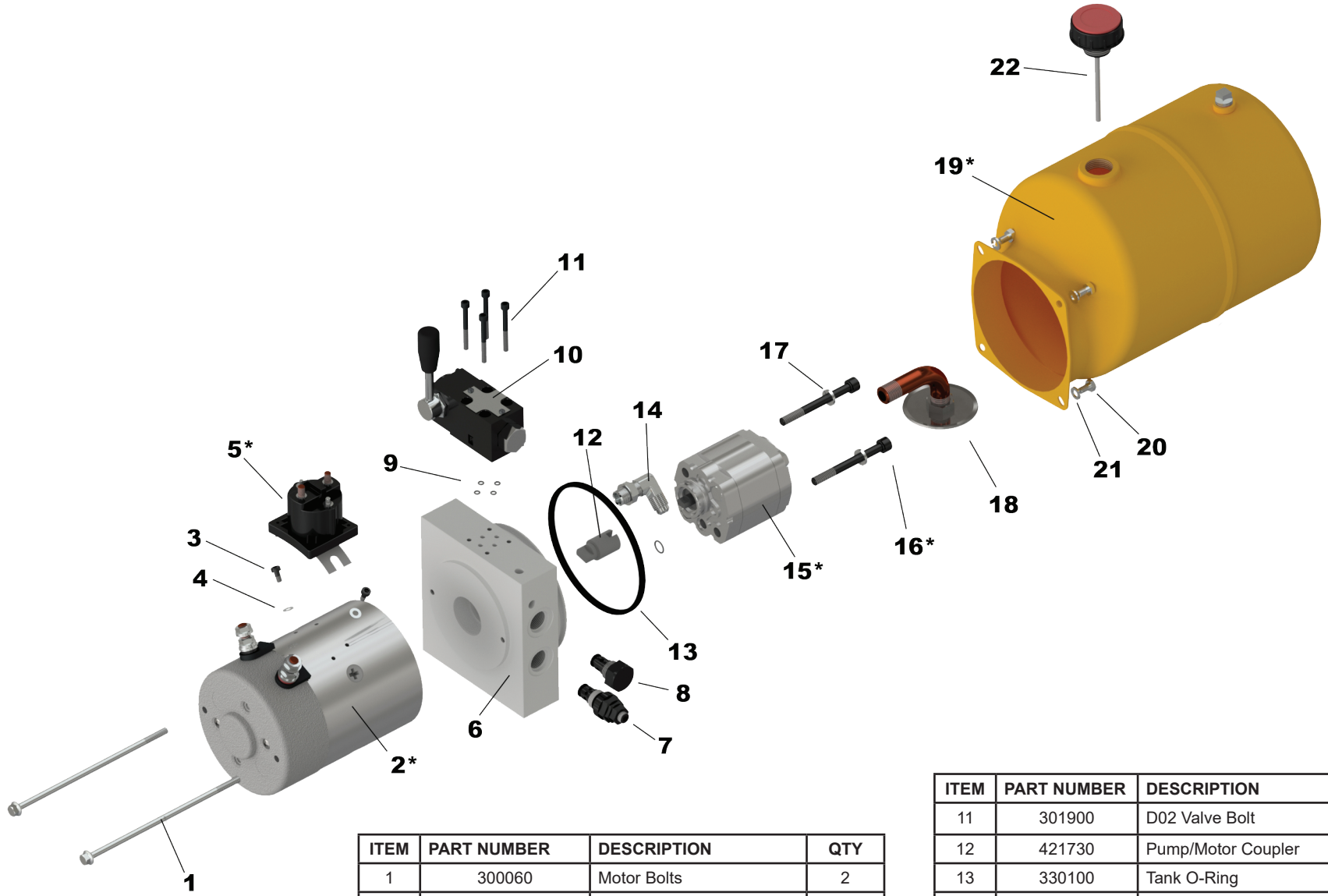

ITEM	PART NUMBER	DESCRIPTION	QTY
1	300060	Motor Bolts	2
2	600xxx*	Motor*	1
3	300010	Solenoid Bolt	2
4	307000	Solenoid Washer	2
5	640xxx*	Solenoid*	1
6	210140	Block	1
7	111000	Relief Valve	1
8	110100	Checkvalve	1
9	330110	Valve O-Ring	4
10	122030	D02 Manual Valve	1

ITEM	PART NUMBER	DESCRIPTION	QTY
11	301900	D02 Valve Bolt	4
12	421730	Pump/Motor Coupler	1
13	330100	Tank O-Ring	1
14	310020	Block Elbow 90°	1
15	400xxx*	Pump*	1
16	301xxx*	Pump Bolt*	2
17	307080	Lockwasher (Pump Bolt)	2
18	150012	Screen Filter Suction Elbow	1
19	500xxx*	Tank*	1
20	300030	Tank Bolt	4
21	307050	Lockwasher (Tank Bolt)	4
22	520030	Breather	1

* items such as motor, pump, pump bolts, coils, solenoid and tank have different ordering part numbers depending on option purchased originally. Always specify model number and serial number when ordering power unit parts

POWER UNIT / UNITÉS DE PUISSANCE

MODEL 24,36,48

MODEL 24 HORIZONTAL

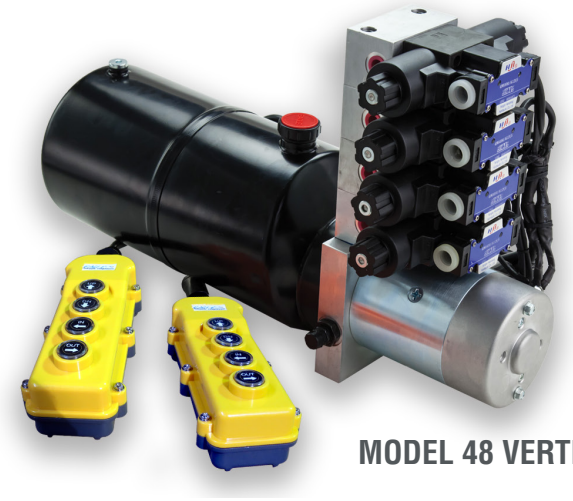

MODEL 48 VERTICAL

This power unit has a double acting circuit with SAE#6 (9/16-18) A & B ports.3 position/4 way modular valve (D03) that can be stacked and combined with other modular options such as piloted check valves, flow control or even port pressure relief (See P.6 in accessories catalogue). This circuit design also utilize a cartridge check and adjustable relief valve. The magnetic four button remote control comes with 6 meters of cable. The gear pump is equipped with a suction screen attach to a 90° elbow inside the tank which comes with a 3/4" NPT breather/dipstick. Valves can be stacked vertically as per above picture, or horizontally over the DC motor.

OPTIONS:

- **Motor:** DC 12 & 24v, or AC 115/230V, single phase or AC 230/460/575V three phase
- **Tank:** From 1.7 liters to 23.5 liters. Plastic or Steel
- **Pump:** 0.8, 1.0, 1.3, 1.6, 2.1, 2.5, 3.2, 4.2, 5.8 and 8.0cc
- **Mounting:** Vertical or Horizontal
- **Valve Mounting:** Vertical or Horizontal

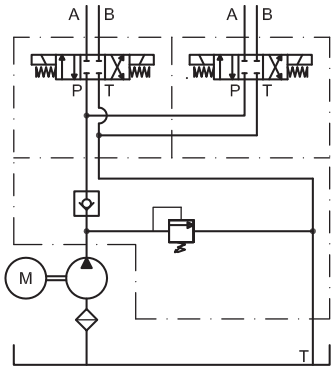

MODEL 24

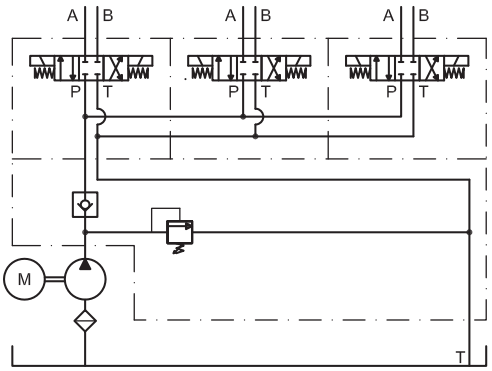

MODEL 36

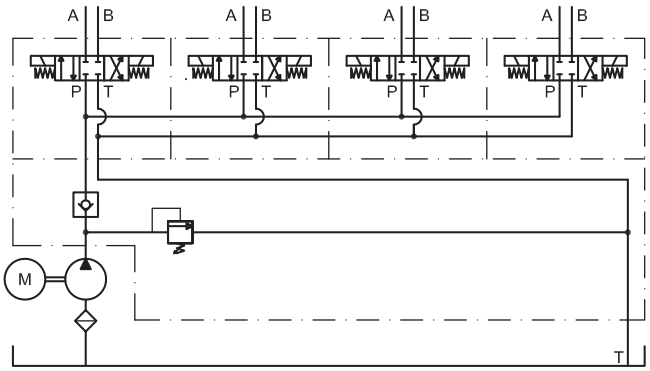

MODEL 48

All numbers given are nominal values and should be used for reference only.

BOLT CHART

ITEM	PART NUMBER	DESCRIPTION	QTY
23	301170	For Model 24	2
	301200	For Model 36	
	301210	For Model 48	

FOR HORIZONTAL VALVE MOUNTING OPTION

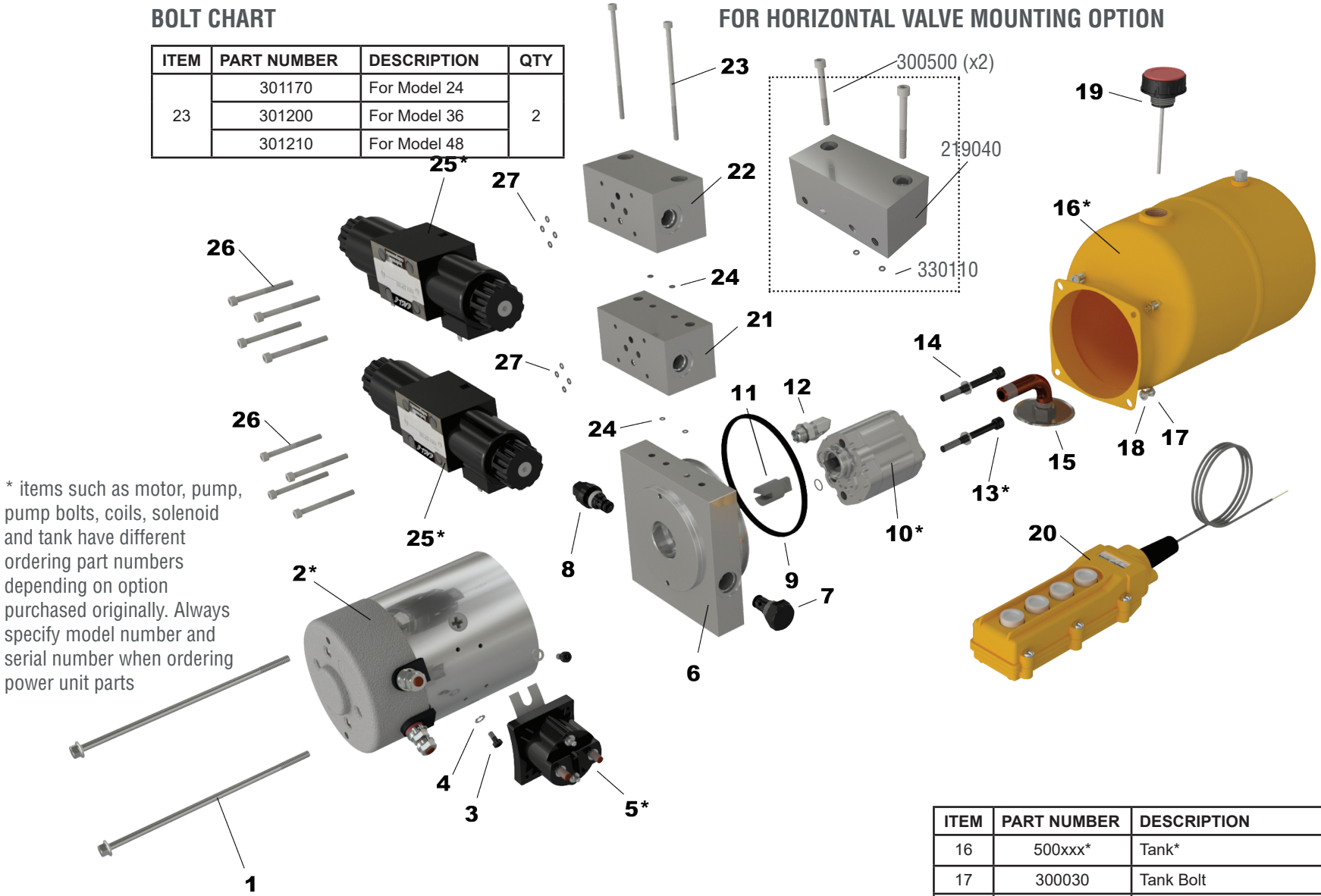

* items such as motor, pump, pump bolts, coils, solenoid and tank have different ordering part numbers depending on option purchased originally. Always specify model number and serial number when ordering power unit parts

ITEM	PART NUMBER	DESCRIPTION	QTY
1	300060	Motor Bolts	2
2	600xxx*	Motor*	1
3	300010	Solenoid Bolt	2
4	307000	Solenoid Washer	2
5	640xxx*	Solenoid*	1
6	210150	Block	1
7	110100	Checkvalve	1

ITEM	PART NUMBER	DESCRIPTION	QTY
8	111000	Relief Valve	1
9	330100	Tank O-Ring	1
10	400xxx*	Pump*	1
11	421000	Motor Coupler	1
12	310020	Block Elbow 90°	1
13	301xxx*	Pump Bolt*	2
14	307080	Lockwasher (Pump Bolt)	2
15	150012	Screen Filter Suction Elbow	1

ITEM	PART NUMBER	DESCRIPTION	QTY
16	500xxx*	Tank*	1
17	300030	Tank Bolt	4
18	307050	Lockwasher (Tank Bolt)	4
19	520030	Breather	1
20	630170	Remote Control	1
21	219020	Block	1
22	219030	Block	1
23	*See Bolt Chart	Block Bolt	2
24	330110	Block O-Ring	4
25	122xxx*	Solenoid Valve D03*	2
26	300500	Valve Bolt	8
27	330110	Valve O-Ring	8

POWER UNIT / UNITÉS DE PUISSANCE

MODEL 28,42,56

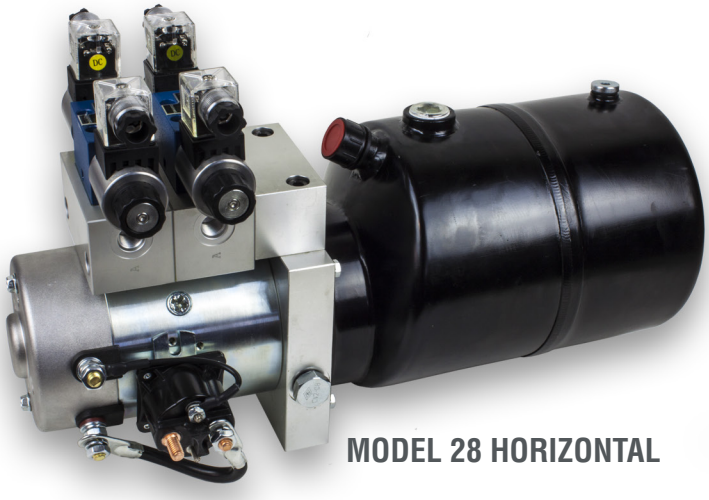

MODEL 28 HORIZONTAL

MODEL 42 VERTICAL

This power unit has a double acting circuit with SAE#6 (9/16-18) A & B ports.3 position/4 way modular valve (D02) that can be stacked and combined with other modular options such as piloted check valves, flow control or even port pressure relief (See P.6 in accessories catalogue). This circuit design also utilize a cartridge check and adjustable relief valve. The magnetic four button remote control comes with 6 meters of cable. The gear pump is equipped with a suction screen attach to a 90° elbow inside the tank which comes with a 3/4" NPT breather/dipstick. Valves can be stacked vertically as per above picture, or horizontally over the DC motor.

OPTIONS:

- **Motor:** DC 12 & 24v, or AC 115/230V, single phase or AC 230/460/575V three phase
- **Tank:** From 1.7 liters to 23.5 liters. Plastic or Steel
- **Pump:** 0.8, 1.0, 1.3, 1.6, 2.1, 2.5, 3.2, 4.2, 5.8 and 8.0cc
- **Mounting:** Vertical or Horizontal
- **Valve Mounting:** Vertical or Horizontal

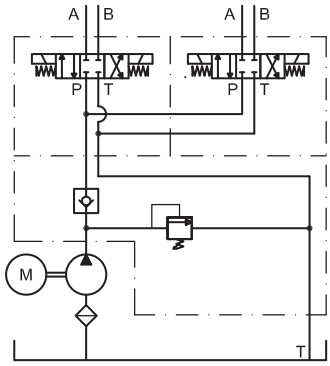

MODEL 28

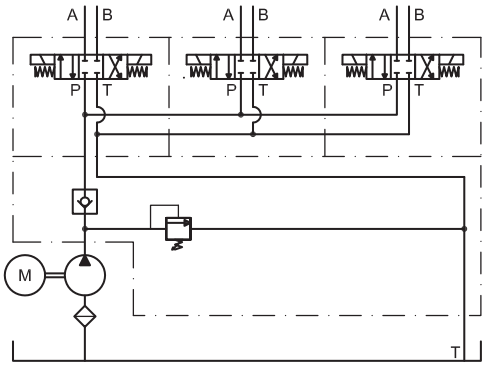

MODEL 42

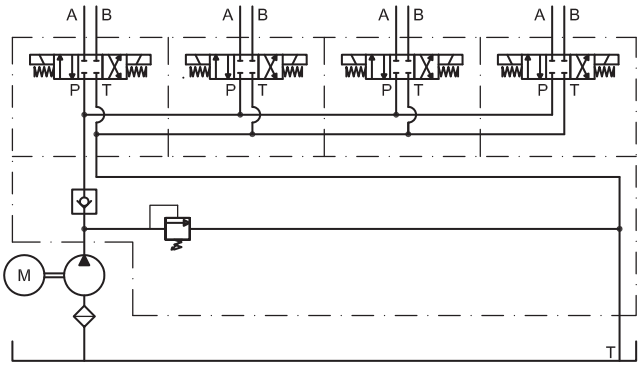

MODEL 56

All numbers given are nominal values and should be used for reference only.

BOLT CHART

ITEM	PART NUMBER	DESCRIPTION	QTY
23	301170	For Model 28	2
	301200	For Model 42	
	301210	For Model 56	

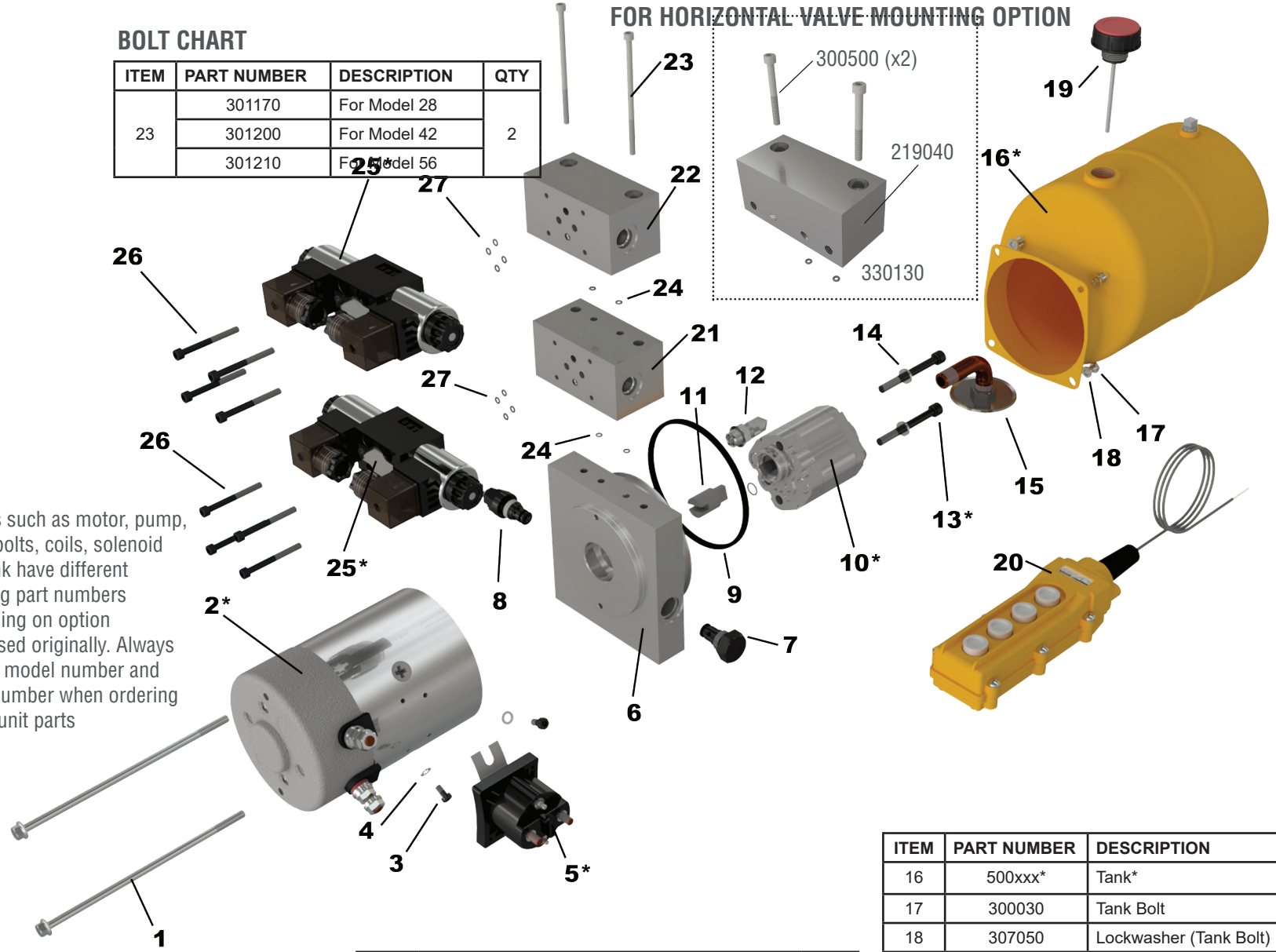

* items such as motor, pump, pump bolts, coils, solenoid and tank have different ordering part numbers depending on option purchased originally. Always specify model number and serial number when ordering power unit parts

ITEM	PART NUMBER	DESCRIPTION	QTY
1	300060	Motor Bolts	2
2	600xxx*	Motor*	1
3	300010	Solenoid Bolt	2
4	307000	Solenoid Washer	2
5	640xxx*	Solenoid*	1
6	210150	Block	1
7	110100	Checkvalve	1

ITEM	PART NUMBER	DESCRIPTION	QTY
8	111000	Relief Valve	1
9	330100	Tank O-Ring	1
10	400xxx*	Pump*	1
11	421000	Motor Coupler	1
12	310020	Block Elbow 90°	1
13	301xxx*	Pump Bolt*	2
14	307050	Lockwasher (Pump Bolt)	2
15	150012	Screen Filter Suction Elbow	1

ITEM	PART NUMBER	DESCRIPTION	QTY
16	500xxx*	Tank*	1
17	300030	Tank Bolt	4
18	307050	Lockwasher (Tank Bolt)	4
19	520030	Breather	1
20	630170	Remote Control	1
21	219050	Block	1
22	219060	Block	1
23	*See Bolt Chart	Block Bolt	2
24	330130	Block O-Ring	4
25	121xxx*	Solenoid Valve D02*	2
26	300500	Valve Bolt	8
27	330130	Valve O-Ring	8

PLASTIC RECTANGULAR TANK DIMENSIONS

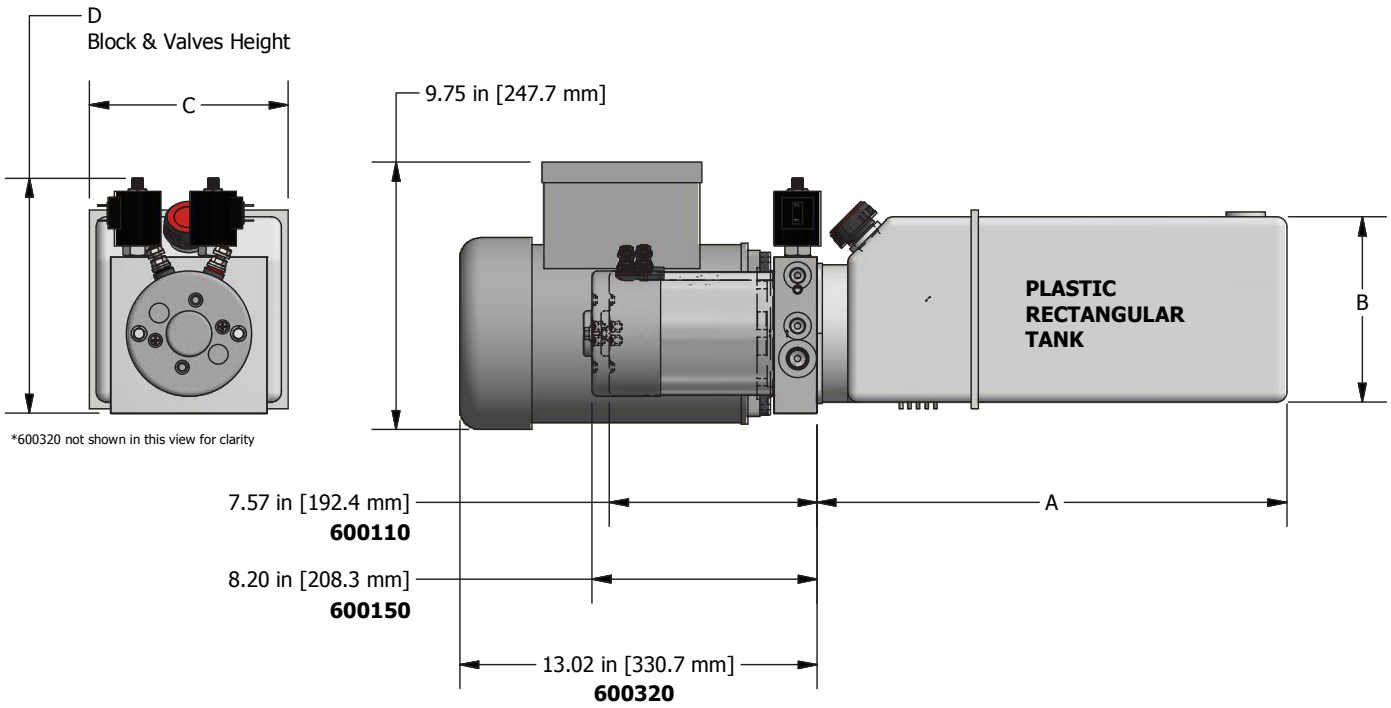

	VOLUME CAPACITY			DIMENSIONS		
PART NUMBER	LITER	US GALLONS	QUARTS	A (LENGTH)	B (HEIGHT)	C (WIDTH)
510020 [B]	4.0	1.06	4.23	7.88” [200.0mm]	6.75” [171.5mm]	6.75” [171.5mm]
510050 [D]	6.0	1.59	6.34	13.18” [335.0mm]		
510060 [F]	8.0	2.12	8.45	17.32” [440.0mm]		
510070 [G]	10.0	2.65	10.57	20.75” [527.0mm]		
510080 [K]	15.1	4.00	16	13.64” [346.4mm]	9.00” [228.6mm]	9.44” [239.7mm]

BLOCK AND VALVES HEIGHT

MODEL	BLOCK & VALVES HEIGHT “D”
01	5.500” [140 mm]
02	8.188” [208 mm]
03	14.750” [375 mm]
06	10.125” [257 mm]
10	8.125” [206 mm]
11	8.125” [206 mm]
12	7.500” [190 mm]
14	10.375” [264 mm]

MODEL	BLOCK & VALVES HEIGHT “D”
15	10.750” [273 mm]
16	9.625” [245 mm]
24	9.500” [241 mm]
36	11.500” [292 mm]
48	13.500” [343 mm]

All numbers given are nominal values and should be used for reference only.

METAL RECTANGULAR TANK DIMENSIONS

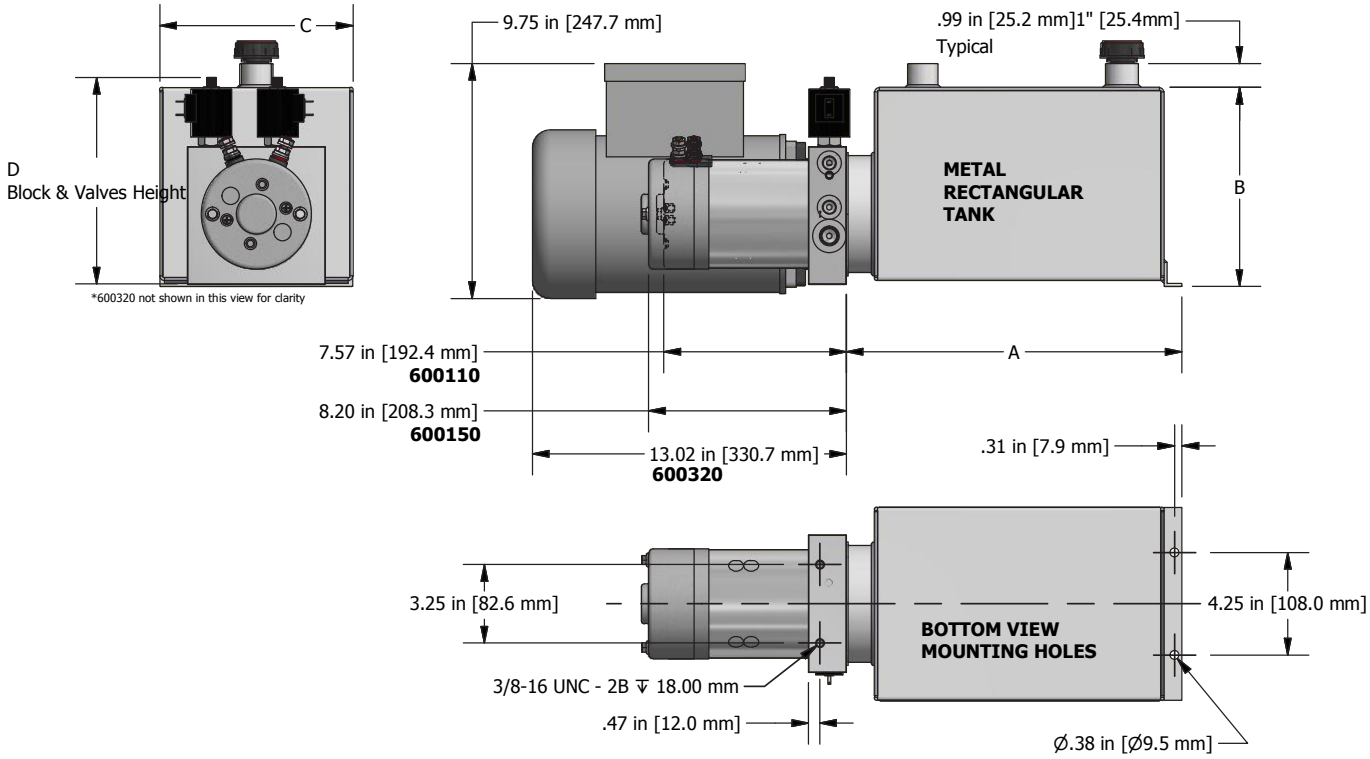

	VOLUME CAPACITY			DIMENSIONS		
PART NUMBER	LITER	US GALLONS	QUARTS	A (LENGTH)	B (HEIGHT)	C (WIDTH)
QH500110 [V]	11.34	3.0	12.0	13.92” [353.6mm]	8.25” [209.6mm]	8.00” [203.2mm]
QH500120 [L]	15.12	4.0	16.0	13.92” [353.6mm]	10.25” [260.4mm]	8.00” [203.2mm]
QH500130 [W]	18.90	5.0	20.0	22.92” [582.2mm]	8.25” [209.6mm]	8.00” [203.2mm]
QH500140 [X]	23.60	6.24	25.0	13.92” [353.6mm]	13.75” [349.25mm]	10.5” [266.7mm]
QH500160 [Y]	26.50	7.0	28.0	13.92” [353.6mm]	12.75” [323.85mm]	13.00” [330.2mm]
QH500150 [Z]	23.60	6.25	25.0	20.92” [531.4mm]	5.625” [142.9mm]	16.00” [406.4mm]
QH500180 [E]	30.20	8.0	32.0	22.92” [582.2mm]	13.25” [336.6mm]	8.00” [203.2mm]
QH500190 [A]	37.80	10.0	40.0	13.50” [342.9 mm]	13.50” [342.9 mm]	-

BLOCK AND VALVES HEIGHT

MODEL	BLOCK & VALVES HEIGHT “D”
01	5.500” [140 mm]
02	8.188” [208 mm]
03	14.750” [375 mm]
06	10.125” [257 mm]
10	8.125” [206 mm]
11	8.125” [206 mm]
12	7.500” [190 mm]
14	10.375” [264 mm]

MODEL	BLOCK & VALVES HEIGHT “D”
15	10.750” [273 mm]
16	9.625” [245 mm]
24	9.500” [241 mm]
36	11.500” [292 mm]
48	13.500” [343 mm]

METAL ROUND TANK DIMENSIONS

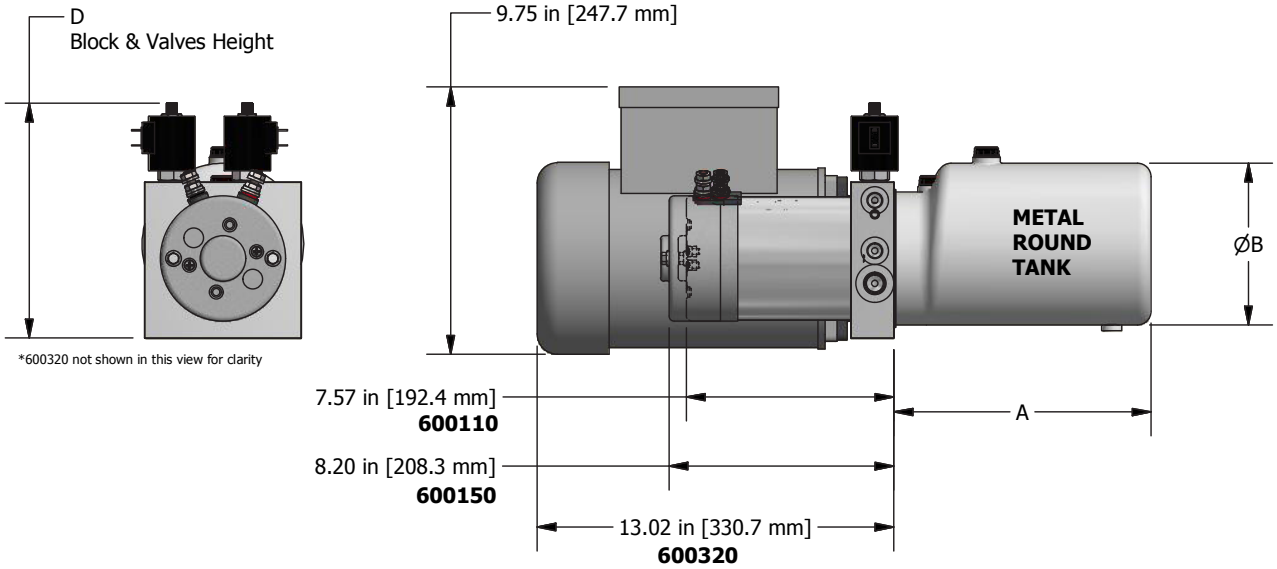

	VOLUME CAPACITY			DIMENSIONS	
PART NUMBER	LITER	US GALLONS	QUARTS	A (LENGTH)	B (HEIGHT)
QH500010 [M]	1.7	0.45	1.80	8.19” [208.0mm]	Ø4.85” [123.1mm]
QH500020 [N]	2.8	0.74	2.96	9.38” [238.1mm]	Ø5.90” [149.9mm]
QH500030 [O]	3.9	1.03	4.12	8.88” [225.4mm]	Ø6.96” [176.8mm]
QH500040 [P]	5.0	1.32	5.28	10.38” [263.5mm]	
QH500060 [Q]	6.0	1.58	6.32	11.38” [288.9mm]	
QH500070 [R]	8.0	2.11	8.44	14.50” [368.3mm]	
QH500080 [S]	10.0	2.64	10.56	16.99” [431.5mm]	
QH500090 [T]	12.0	3.17	12.68	21.24” [539.5mm]	
QH500100 [U]	14.0	3.70	14.8	23.75” [603.3mm]	

BLOCK AND VALVES HEIGHT

MODEL	BLOCK & VALVES HEIGHT “D”
01	5.500” [140 mm]
02	8.188” [208 mm]
03	14.750” [375 mm]
06	10.125” [257 mm]
10	8.125” [206 mm]
11	8.125” [206 mm]
12	7.500” [190 mm]
14	10.375” [264 mm]

MODEL	BLOCK & VALVES HEIGHT “D”
15	10.750” [273 mm]
16	9.625” [245 mm]
24	9.500” [241 mm]
36	11.500” [292 mm]
48	13.500” [343 mm]

All numbers given are nominal values and should be used for reference only.

MOTOR PERFORMANCE CHART

Exceeds Amperage Available for Testing
Non-Conducted Test
Exceeds Maximum Motor Amperage (24A)

MOTOR 12V (1.6KW OR 2.14HP) 2500 RPM -COMPOUND WOUND, 4 POLES - 600110

	400010 Pump .8cc			400020 Pump 1.0cc			400040 Pump 1.6cc			400050 Pump 2.1cc			400060 Pump 2.5cc			400080 Pump 3.2cc			400090 Pump 4.2cc			400100 Pump 5.8cc			400110 Pump 8.0cc		
Pressure	L/MIN	G/MIN	AMP	L/MIN	G/MIN	AMP	L/MIN	G/MIN	AMP	L/MIN	G/MIN	AMP	L/MIN	G/MIN	AMP	L/MIN	G/MIN	AMP	L/MIN	G/MIN	AMP	L/MIN	G/MIN	AMP	L/MIN	G/MIN	AMP
0	3.75	0.99	39	4.75	1.25	48	5.8	1.53	80	9.5	2.51	52	10.3	2.71	54	12.3	3.24	73	16.1	4.25	79	17.5	4.62	79.9	20	5.28	122
250	3.5	0.92	49	4.4	1.16	58	5.4	1.43	98	8.6	2.27	81	9	2.38	86	11	2.91	102	13.2	3.49	129	15	3.96	122	17	4.49	155
500	3.3	0.87	54	4.2	1.11	65	5.1	1.35	107	7.1	1.88	97	8.5	2.25	97	10.3	2.71	114	11	2.91	148	14.5	3.83	137	15.9	4.2	178
750	3.25	0.86	61	3.9	1.03	74	4.6	1.22	122	6.6	1.74	111	8	2.11	113	9.5	2.51	136	9.5	2.51	189	12.3	3.25	183	14	3.7	240
1000	3.2	0.85	68	3.7	0.98	80	4.25	1.12	133	6.25	1.65	133	7.5	1.98	132	8.75	2.31	158	8.1	2.14	229	11	2.91	222	12	3.17	279
1250	3	0.79	72	3.6	0.95	92	4	1.06	149	6.1	1.61	151	7	1.85	145	7.25	1.92	178	6.9	1.82	254	9.1	2.4	264	6.2	1.64	340
1500	2.9	0.77	80	3.5	0.93	99	4	1.06	158	5.6	1.48	166	6.5	1.72	169	6.75	1.78	200	6	1.59	289	8.3	2.19	302	4.2	1.11	386
1750	2.8	0.74	88	3.5	0.93	108	3.65	0.96	171	5.25	1.39	182	6.1	1.61	184	6.5	1.72	217	5.5	1.45	320	5.2	1.37	347			
2000	2.75	0.73	93	3.3	0.87	118	3.6	0.95	182	5.1	1.35	193	5.8	1.53	198	6.25	1.65	240	4.5	1.19	359	2.6	0.69	380			
2250	2.75	0.73	98	3.2	0.85	128	3.5	0.93	201	4.5	1.19	212	5.5	1.45	210	6	1.59	260	4.1	1.08	412						
2500	2.6	0.69	106	3	0.79	136	3.4	0.9	223	4.25	1.12	220	5.25	1.39	250	5.5	1.45	280	3.4	0.9	468						
2750	2.5	0.66	110	2.6	0.69	146	3.2	0.85	224	4.1	1.08	230	5	1.32	267	5.15	1.36	300	3.7	0.98	476						
3000	2.4	0.63	117	1.4	0.37	149	3	0.79	237	3.9	1.03	251	3.75	0.99	282	5	1.32	320									

MOTOR 12V LONG DUTY BLACK (1.6KW OR 2.14HP) 2500 RPM - SERIES WOUND, 4 POLES - 600120

	400010 Pump .8cc			400020 Pump 1.0cc			400040 Pump 1.6cc			400050 Pump 2.1cc			400060 Pump 2.5cc			400080 Pump 3.2cc			400090 Pump 4.2cc			400100 Pump 5.8cc			400110 Pump 8.0cc		
Pressure	L/MIN	G/MIN	AMP	L/MIN	G/MIN	AMP	L/MIN	G/MIN	AMP	L/MIN	G/MIN	AMP	L/MIN	G/MIN	AMP	L/MIN	G/MIN	AMP	L/MIN	G/MIN	AMP	L/MIN	G/MIN	AMP	L/MIN	G/MIN	AMP
0	5.8	1.53	78	7.6	2.01	85	11.2	2.96	94	13	3.43	101	13	3.43	107	14	3.7	115	15.1	3.99	117	21	5.55	128	22.5	5.94	158
250	5.1	1.35	89	6.5	1.72	96	9.5	2.51	108	11	2.91	118	11.3	2.97	126	12.2	3.21	142	14.6	3.86	160	17	4.49	158	19	5.02	192
500	4.75	1.25	94	6.15	1.62	101	9	2.38	115	10	2.64	127	10.5	2.77	139	11.8	3.1	150	14	3.7	174	15.2	4.02	176	18	4.76	203
750	4.5	1.19	100	5.8	1.53	108	7.6	2.01	125	9	2.38	141	9.75	2.58	171	11	2.91	168	12.5	3.3	196	13.5	3.57	206	16	4.23	239
1000	4.25	1.12	107	5.3	1.4	116	7	1.85	139	7.6	2.01	156	9	2.38	163	10	2.64	190	11	2.91	217	12.8	3.38	243	14	3.7	295
1250	4.15	1.1	113	5.1	1.35	126	6.3	1.66	154	7.1	1.88	167	7.6	2.01	183	9	2.38	205	10.3	2.71	244	10	2.64	280	11.8	3.12	346
1500	4	1.06	119	4.75	1.25	133	6.1	1.61	163	6.6	1.74	180	7.1	1.88	196	8.75	2.31	220	9.75	2.58	268	9	2.38	305	9.9	2.62	375
1750	3.85	1.02	125	4.6	1.22	140	5.9	1.56	172	6.3	1.66	191	6.5	1.72	213	8	2.11	236	9.25	2.44	290	6.8	1.8	336	7	1.85	433
2000	3.75	0.99	134	4.5	1.19	152	5.5	1.45	185	6	1.59	205	6.3	1.66	229	7.25	1.92	256	9	2.38	314	6.8	1.8	364	5.8	1.53	461
2250	3.75	0.99	137	4.1	1.08	156	5	1.32	188	5.75	1.52	217	6	1.59	244	6.7	1.77	273	8	2.11	334	5.2	1.37	396			
2500	3.6	0.95	142	3.75	0.99	161	4.75	1.25	202	5.3	1.4	230	5.75	1.52	253	6.25	1.65	292	7.25	1.92	356	5	1.32	437			
2750	3.4	0.9	147	3.5	0.92	165	4.5	1.19	207	5	1.32	244	5.3	1.4	271	6.1	1.61	305	6.85	1.81	373						
3000	3.15	0.83	155	3.25	0.86	176	4.25	1.12	227	4.75	1.25	257	5	1.32	287	5.6	1.48	327	6	1.59	400						

All product specifications are subject to change without prior notice.

MOTOR PERFORMANCE CHART

POWER UNIT / UNITÉS DE PUISSANCE

Exceeds Amperage Available for Testing
Non-Conducted Test
Exceeds Maximum Motor Amperage (24A)

MOTOR 24V (2.0KW OR 2.68HP) 2500 RPM - 600200

	400010 Pump .8cc			400020 Pump 1.0cc			400040 Pump 1.6cc			400050 Pump 2.1cc			400060 Pump 2.5cc			400080 Pump 3.2cc			400090 Pump 4.2cc			400100 Pump 5.8cc			400110 Pump 8.0cc		
Pressure	L/MIN	G/MIN	AMP	L/MIN	G/MIN	AMP	L/MIN	G/MIN	AMP	L/MIN	G/MIN	AMP	L/MIN	G/MIN	AMP	L/MIN	G/MIN	AMP	L/MIN	G/MIN	AMP	L/MIN	G/MIN	AMP	L/MIN	G/MIN	AMP
0	4.25	1.12	30	5.5	1.45	32	7.75	2.05	36	9	2.38	38	10.5	2.77	42	15	3.96	40	13	3.43	58	20	5.28	58.6	23.5	6.21	80.6
250	3.65	0.96	38	4.5	1.19	41	6.5	1.72	48	7	1.85	55	9	2.38	58	14	3.7	50	10.3	2.71	84	16.9	4.46	80.7	21	5.55	102
500	3.4	0.9	40	4.25	1.12	44	6.15	1.62	51	6.75	1.78	60	8	2.11	65	12.5	3.3	59	10	2.64	91	16.5	4.36	96.2	20	5.28	109
750	3.25	0.86	43	4	1.06	48	5.75	1.52	58	6.5	1.72	68	7	1.85	74	11	2.91	78	9.5	2.51	100	16	4.23	102	18	4.76	132
1000	3	0.79	47	3.75	0.99	52	5.35	1.41	63	6.15	1.62	74	6.5	1.72	82	9.5	2.51	96	8.25	2.18	119	14.2	3.75	102	16	4.23	162
1250	2.8	0.74	51	3.5	0.92	57	5	1.32	70	5.6	1.48	83	5.8	1.53	92	8.5	2.25	112	7.25	1.85	134	11.2	2.96	104	14	3.7	195
1500	2.75	0.73	53	3.3	0.87	60	4.6	1.21	75	5.2	1.37	92	5.3	1.4	104	8	2.11	130	6.75	1.78	144	11	2.91	126	13.5	3.57	218
1750	2.6	0.69	56	3.25	0.86	65	4.35	1.15	84	4.75	1.25	100	4.9	1.29	113	7	1.85	146	6.25	1.65	158	10	2.64	189	9	2.38	247
2000	2.5	0.66	61	3	0.79	68	4.25	1.12	88	4.5	1.19	108	4.6	1.22	121	7	1.85	166	6	1.59	171	9.8	2.59	205			
2250	2.45	0.65	64	3	0.79	73	4	1.06	95	4.25	1.12	113	4.5	1.19	127	6.5	1.72	168	5.5	1.45	184	7.2	1.9	246			
2500	2.4	0.63	66	2.8	0.74	75	3.75	0.99	100	4	1.06	122	4.4	1.16	136	6.5	1.72	187	5.25	1.39	190						
2750	2.25	0.59	71	2.6	0.69	81	3.7	0.98	105	3.75	0.99	133	4.3	1.14	140	4.9	1.29	207	5.1	1.35	210						
3000	2.25	0.59	75	2.5	0.66	86	3.55	0.94	112	3.5	0.92	139	4.2	1.11	153	4.5	1.19	220	5	1.32	219						

MOTOR 115V (2HP) (3480 RPM) - 600320

	400010 Pump .8cc			400020 Pump 1.0cc			400040 Pump 1.6cc			400050 Pump 2.1cc			400060 Pump 2.5cc			400080 Pump 3.2cc			400090 Pump 4.2cc			400100 Pump 5.8cc			400110 Pump 8.0cc		
Pressure	L/MIN	G/MIN	AMP	L/MIN	G/MIN	AMP	L/MIN	G/MIN	AMP	L/MIN	G/MIN	AMP	L/MIN	G/MIN	AMP	L/MIN	G/MIN	AMP	L/MIN	G/MIN	AMP	L/MIN	G/MIN	AMP	L/MIN	G/MIN	AMP
0	3.2	0.85	4	3.9	1.03	4	6.05	1.6	4	8	2.11	5	9.25	2.44	5	12	3.17	6	15.2	4.02	10	18.9	4.99	9	24	6.34	16.4
250	2.9	0.77	4	3.9	1.03	4	5.8	1.53	6	8	2.11	7	9	2.38	8	12	3.17	9	15	3.96	12	16	4.23	13.4			
500	2.9	0.77	5	3.9	1.03	5	5.6	1.48	7	8	2.11	9	9	2.38	9	11.9	3.14	12	15	3.95	15	12.5	3.3	16.6			
750	2.85	0.75	5	3.8	1	6	5.5	1.45	9	8	2.11	11	9	2.38	13	11.9	3.14	15	14.5	3.8	20	8	2.11	20.6			
1000	2.8	0.74	7	3.75	0.99	8	5.25	1.39	10	8	2.11	13	9	2.38	15	11.5	3.04	19	14.3	3.76	26						
1250	2.75	0.73	7	3.6	0.95	8	5.25	1.39	12	8	2.11	15	9	2.38	17	11.5	3.04	23									
1500	2.7	0.71	9	3.55	0.94	10	5	1.32	14	8	2.11	18	9	2.38	21	11	2.91	25									
1750	2.5	0.66	9	3.5	0.92	10	5	1.32	15	8	2.11	20	9	2.38	23												
2000	2.4	0.63	10	3.45	0.91	12	5	1.32	17	8	2.11	23															
2250	2.4	0.63	10	3.35	0.88	12	5	1.32	19	7.75	2.05	25															
2500	2.3	0.61	12	3.25	0.86	14	4.95	1.31	21																		
2750	2.3	0.61	12	3.15	0.83	15	4.8	1.27	24																		
3000	2.15	0.57	13	3	0.79	17																					

MOTOR 115V (3HP) (3480 RPM) - 600340

	400010 Pump .8cc			400020 Pump 1.0cc			400040 Pump 1.6cc			400050 Pump 2.1cc			400060 Pump 2.5cc			400080 Pump 3.2cc			400090 Pump 4.2cc			400100 Pump 5.8cc			400110 Pump 8.0cc		
Pressure	L/MIN	G/MIN	AMP	L/MIN	G/MIN	AMP	L/MIN	G/MIN	AMP	L/MIN	G/MIN	AMP	L/MIN	G/MIN	AMP	L/MIN	G/MIN	AMP	L/MIN	G/MIN	AMP	L/MIN	G/MIN	AMP	L/MIN	G/MIN	AMP
0							5.95	1.57	7	8.1	2.14	7	9.2	2.43	7	12	3.17	9	15	3.96	12	19	5.02	10.7	25.1	6.63	19.4
250							5.75	1.52	8	8	2.11	8	9.2	2.43	9	12	3.17	11	15	3.96	14	19	5.02	13.1	25	6.6	21.4
500							5.5	1.45	9	8	2.11	10	9.2	2.43	11	12	3.17	13	15	3.96	17	18.5	4.89	18.5	24.8	6.55	30
750							5.45	1.44	11	8	2.11	12	9.2	2.43	13	12	3.17	16	14.9	3.94	21	17.6	4.65	25.1			
1000							5.45	1.44	12	8	2.11	15	9.2	2.43	15	12	3.17	19	14.9	3.94	25	17.4	4.6	31.8			
1250							5.45	1.44	14	8	2.11	16	9	2.38	18	12	3.17	22									
1500							5.45	1.44	15	8	2.11	19	9	2.38	21	11.8	3.12	25									
1750							5.45	1.44	17	8	2.11	20	9	2.38	24												
2000							5.45	1.44	18	8	2.11	23	9	2.38	25												
2250							5.45	1.44	20	8	2.11	24															
2500							5.25	1.39	21																		
2750							5.15	1.36	22																		
3000							5.15	1.36	24																		

All numbers given are nominal values and should be used for reference only.

POWER UNIT / UNITÉS DE PUISSANCE

MOTOR PERFORMANCE CHART

Exceeds Amperage Available for Testing
Non-Conducted Test
Exceeds Maximum Motor Amperage (24A)

MOTOR 230V (2HP) (3480 RPM) - 600320

	400010 Pump .8cc			400020 Pump 1.0cc			400040 Pump 1.6cc			400050 Pump 2.1cc			400060 Pump 2.5cc			400080 Pump 3.2cc			400090 Pump 4.2cc			400100 Pump 5.8cc			400110 Pump 8.0cc		
Pressure	L/MIN	G/MIN	AMP	L/MIN	G/MIN	AMP	L/MIN	G/MIN	AMP	L/MIN	G/MIN	AMP	L/MIN	G/MIN	AMP	L/MIN	G/MIN	AMP	L/MIN	G/MIN	AMP	L/MIN	G/MIN	AMP	L/MIN	G/MIN	AMP
0	3.2	0.85	2.5	3.75	0.99	2	6	1.59	3	7.75	2.05	2	9	2.38	3	12	3.17	3	14.5	3.8	4	18.9	4.99	4.6	24	6.34	8.9
250	3	0.79	4	3.6	0.95	3	6	1.59	4	7.75	2.05	4	9	2.38	5	11	2.91	5	14.3	3.76	7	16	4.23	6.7			
500	2.9	0.77	4	3.55	0.94	4	6	1.59	4	7.75	2.05	5	9	2.38	5.5	11	2.91	6	14	3.7	8	13	3.43	7.8			
750	2.9	0.77	4	3.5	0.92	4	5.9	1.56	5	7.75	2.05	6	8.9	2.35	7	11	2.91	8	13.5	3.57	10	6.5	1.72	9.8			
1000	2.8	0.74	5	3.4	0.9	5	5.8	1.53	6	7.5	1.98	7	8.75	2.31	8	11	2.91	11									
1250	2.8	0.74	6	3.3	0.87	6	5.75	1.52	7	7.5	1.98	8	8.5	2.25	9	10.5	2.77	11.5									
1500	2.75	0.73	6	3.25	0.86	6	5.5	1.45	8	7.5	1.98	9	8.5	2.25	11												
1750	2.75	0.73	7	3.2	0.85	7	5.4	1.43	8	7.25	1.92	10															
2000	2.75	0.73	8	3.15	0.83	8	5.3	1.4	9	6.75	1.78	12															
2250	2.75	0.73	8	3.1	0.82	9	5.25	1.39	10																		
2500	2.75	0.73	9	3.1	0.82	9	5.15	1.36	11																		
2750	2.75	0.73	9	3	0.79	10																					
3000	2.75	0.73	10	3	0.79	10																					

MOTOR 230V (3HP) (3480 RPM) - 600340

	400010 Pump .8cc			400020 Pump 1.0cc			400040 Pump 1.6cc			400050 Pump 2.1cc			400060 Pump 2.5cc			400080 Pump 3.2cc			400090 Pump 4.2cc			400100 Pump 5.8cc			400110 Pump 8.0cc		
Pressure	L/MIN	G/MIN	AMP	L/MIN	G/MIN	AMP	L/MIN	G/MIN	AMP	L/MIN	G/MIN	AMP	L/MIN	G/MIN	AMP	L/MIN	G/MIN	AMP	L/MIN	G/MIN	AMP	L/MIN	G/MIN	AMP	L/MIN	G/MIN	AMP
0	3	0.79	2.9	3.5	0.92	2.8	5.4	1.4	2.7	7.1	1.88	2.9	8.5	2.25	3	11	2.91	3.3	15	3.96	3.7	19	5.02	5.7	25.3	6.88	9.9
250	3	0.79	3.6	3.4	0.9	4	5.2	137	4	7.1	1.88	4.4	8.5	2.25	4.5	10.5	2.77	5.6	14.8	3.91	6.4	18.9	4.99	7	25.3	6.88	10.8
500	3	0.79	4.3	3.3	0.87	4.6	5.2	1.37	4.3	7.1	1.88	5.1	8.5	2.25	5.4	10.5	2.77	6.4	14.7	3.88	7.9	18.5	4.89	9.4	25	6.6	14.7
750	2.9	0.77	4.7	3.2	0.85	5.2	5.2	1.37	5	7.1	1.88	5.7	8.5	2.25	6.6	10.5	2.77	8.1	14.6	3.86	9.5	18	4.76	12.4	19.5	5.15	20
1000	2.9	0.77	5.6	3.2	0.85	6	5.2	1.37	5.8	7	1.85	6.8	8.4	2.22	7.8	10.5	2.77	9.6	14.6	3.86	11.4	17.9	4.73	15.5			
1250	2.8	0.74	6	3.2	0.85	6.6	5.1	1.35	6.8	7	1.85	7.7	8.1	2.14	8.6	10.2	2.69	10.5	14.6	3.86	13.6	16.8	4.44	19.3			
1500	2.7	0.71	6.6	3.1	0.82	7.1	5.1	1.35	7.1	7	1.85	8.6	8.1	2.14	10	10.2	2.69	12.4	14.6	3.86	15.9						
1750	2.5	0.66	7.4	3.1	0.82	7.9	5.1	1.35	7.8	7	1.85	9.5	8	2.11	11.5	10.1	2.67	14.5	13	3.43	18.8						
2000	2.5	0.66	7.8	3	0.79	8.3	5.1	1.35	8.8	7	1.85	10.6	8	2.11	12.9	10	2.64	16.2	13	3.43	23						
2250	2.4	0.63	8.4	3	0.79	8.9	5.1	1.35	9.3	7	1.85	11.6	8	2.11	14.3	10	2.64	18.6									
2500	2.3	0.61	9.1	3	0.79	9.5	5.1	1.35	10	7	1.85	13	8	2.11	15.5	10	2.64	21									
2750	2.2	0.58	9.8	3	0.79	10.7	5.1	1.35	10.8	7	1.85	14	8	2.11	17.3												
3000	2	0.53	10.4	2.9	0.77	11.5	5.1	1.35	11.8	7	1.85	15.4	7.8	2.06	20												

MOTOR 575V (3HP) (3480 RPM) *AMP DRAW ON ONE PHASE - 600350

	400010 Pump .8cc			400020 Pump 1.0cc			400040 Pump 1.6cc			400050 Pump 2.1cc			400060 Pump 2.5cc			400080 Pump 3.2cc			400090 Pump 4.2cc			400100 Pump 5.8cc			400110 Pump 8.0cc		
Pressure	L/MIN	G/MIN	AMP	L/MIN	G/MIN	AMP	L/MIN	G/MIN	AMP	L/MIN	G/MIN	AMP	L/MIN	G/MIN	AMP	L/MIN	G/MIN	AMP	L/MIN	G/MIN	AMP	L/MIN	G/MIN	AMP	L/MIN	G/MIN	AMP
0	3.2	0.85	2.5	3.3	0.87	2.4	5.5	1.45	2.4	7.25	1.92	2.4	9	2.38	2.5	11	2.91	2.5	14.5	3.83	2.6	19.1	5.05	2.8	25.3	6.68	3.4
250	3.1	0.82	2.6	3.3	0.87	2.5	5.3	1.4	2.5	7.25	1.92	2.5	9	2.38	2.6	11	2.91	2.6	14.5	3.83	2.8	19.1	5.05	2.9	25.1	6.63	3.5
500	3	0.79	2.6	3.3	0.87	2.5	5.3	1.4	2.5	7.25	1.92	2.6	9	2.38	2.7	11	2.91	2.7	14.5	3.83	2.9	18.9	4.99	3.2	25	6.6	4.1
750	3	0.79	2.6	3.3	0.87	2.6	5.3	1.4	2.5	7.25	1.92	2.6	8.7	2.3	2.8	11	2.91	2.9	14	3.7	3.2	18	4.76	3.6			
1000	3	0.79	2.7	3.3	0.87	2.7	5.3	1.4	0.26	7.1	1.88	2.7	8.7	2.3	2.9	11	2.91	3.1	14	3.7	3.6						
1250	2.9	0.77	2.7	3.2	0.85	2.7	5.2	1.37	2.7	7.1	1.88	2.8	8.7	2.3	3	11	291	3.4	14	3.7	4.2						
1500	2.8	0.74	2.7	3	0.79	2.8	5.2	1.37	2.8	7	1.85	3	8.5	2.25	3.2	11	2.91	3.5	14	3.7	4.4						
1750	2.7	0.71	2.8	3	0.79	2.8	5.2	1.37	2.8	7	1.85	3.2	8.5	2.25	3.4	11	2.91	3.9	14	3.7	4.9						
2000	2.6	0.69	2.8	3	0.79	2.9	5.1	1.35	3	7	1.85	3.3	8.5	2.25	3.6	10.5	2.77	4.4	13.5	3.57	5.4						
2250	2.5	0.66	2.9	3	0.79	2.9	5.1	1.35	3.1	7	1.85	3.6	8.2	2.17	3.9	10.5	277	4.6									
2500	2.5	0.66	3	3	0.79	3.2	5.1	1.35	3.2	7	1.85	3.7	8.2	2.17	4.2	10.5	2.77	5									
2750	2.5	0.66	3.1	2.9	0.77	3.3	5.1	1.35	3.3	6.9	1.82	3.9	8	2.11	4.4												
3000	2.5	0.66	3.3	2.8	0.74	3.5	5.1	1.35	3.4	6.9	1.82	4.1	8	2.11	4.7												

All product specifications are subject to change without prior notice.

DC ELECTRIC MOTOR FOR POWER UNITS

- ▶ 600110 - 12v 1.6 Kw/2 HP standard
- ▶ 600120 - 12v 1.6 Kw/2 HP long duty powder coated black
- ▶ 600150 - 12v 2 Kw/2.6 HP heavy duty
- ▶ 600210 - 24v 2 Kw/2.6 HP heavy duty

AC ELECTRIC MOTOR FOR POWER UNITS

- ▶ 600320 - 115/230v/2HP (3480 RPM) 1 phase - Intermittent periodic duty (S3)
- ▶ 600340 - 115/230v/3HP (3480 RPM) 1 phase - Intermittent periodic duty (S3)
- ▶ 600350 - 230/460/575v/3HP (3480 RPM) 3 phases - Intermittent periodic duty (S3)

POWER UNIT SOLENOID

- ▶ 640040 - 12v
- ▶ 640050 - 24v

POWER UNIT GEAR PUMP

- ▶ 400010 - 0.8 cc
- ▶ 400020 - 1.0 cc
- ▶ 400040 - 1.6 cc
- ▶ 400050 - 2.1 cc
- ▶ 400250 - 2.5 cc
- ▶ 400320 - 3.2 cc
- ▶ 400420 - 4.2 cc
- ▶ 400580 - 5.8 cc
- ▶ 400800 - 8.0 cc

SUCTION STRAINER

- ▶ 150012 - Suction Strainer with 90° Elbow, 3/8” BSPP

CARTRIDGE VALVE 1 WAY, 2 POSITIONS WITH MANUAL OVERRIDE

- ▶ 115200 - Valve & Coil 12v
- ▶ 641010 - Coil 12v
- ▶ 641020 - Coil 24v
- ▶ 641030 - Coil 110v
- ▶ 641040 - Coil 220v

All numbers given are nominal values and should be used for reference only.

STEEL ROUND RESERVOIR 1.5 MM THICK

- 500010 - 1.7 L (0.5 Gal.)
- 500020 - 2.8 L (0.75 Gal.)
- 500030 - 3.9 L (1.0 Gal.)
- 500050 - 5.0 L (1.3 Gal.)
- 500060 - 6.0 L (1.59 Gal.)
- 500070 - 8.0 L (2.1 Gal.)
- 500080 - 10.0 L (2.6 Gal.)
- 500090 - 12.0 L (3.2 Gal.)
- 500100 - 14.0 L (3.7 Gal.)

SQUARE PLASTIC RESERVOIR 5MM THICK

- 510020 - 4.0 L (1.0 Gal.)
- 510030 - 5.0 L (1.32 Gal.)
- 510040 - 6.0 L (1.58 Gal.)
- 510050 - 8.0 L (2.11 Gal.)
- 510060 - 10.0 L (2.64 Gal.)
- 510080 - 4.0 Gal. (15.1 L)

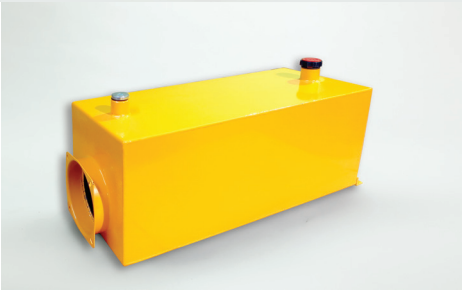

STEEL SQUARE RESERVOIR 3MM THICK

- 500110 - 3.0 Gal. (11.34 L)
- 500120 - 4.0 Gal. (15.12 L)
- 500130 - 5.0 Gal. (18.9 L)
- 500140 - 6.4 Gal. (24.2 L)
- 500160 - 7.0 Gal. (26.5 L)
- 500180 - 8.0 Gal. (30.2 L)
- 500190 - 10.0 Gal. (37.8 L)

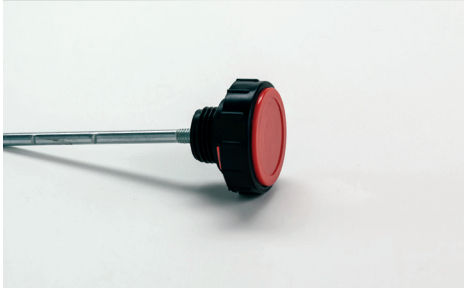

BREATHER DIP STICK COMBINATION 3” LONG

- 520060 - 3/8” NPT
- 520050 - 1/2” NPT
- 520030 - 3/4” NPT

RESERVOIR LEVEL GAUGE WITH THERMOMETER

- 520080 - 5” X 5” WITH 3/8” BOLTS MOUNTING HOLES 4” APART ℄

FOR RESERVOIR UP TO 1/2” THICK

All product specifications are subject to change without prior notice.

POWER UNIT TOOLBOX

- 810200 Aluminum Tool Box with stainless locking handle and gas filled cylinder for lid. **Call for Details**
- 810100 Polymer Tool Box with locking hasp.
  36” W X 18.75” D X 17.75” H

2 BUTTONS REMOTE CONTROL 16/3 (SINGLE ACTING)

- 630140
- 610070 10’ EXTENSION FOR 2 BUTTONS REMOTE CONTROL

REMOTE CONTROL WITH 2 BUTTONS FOR SINGLE ACTING UNIT, MAGNETIC BACK AND PLASTIC SUPPORT. INCLUDED: 20’ OF 16/3 CABLE WITH TERMINALS

2 BUTTONS REMOTE CONTROL 16/4 (DOUBLE ACTING)

- 630060
- 610070 10’ EXTENSION FOR 2 BUTTONS REMOTE CONTROL

REMOTE CONTROL WITH 2 BUTTONS FOR DOUBLE ACTING UNIT, MAGNETIC BACK AND PLASTIC SUPPORT. INCLUDED: 20’ OF 16/4 CABLE WITH TERMINALS

4 BUTTONS REMOTE CONTROL 16/6 (OPTION 24 UNIT)

- 630170

REMOTE CONTROL WITH 4 BUTTONS FOR OPTION 24 UNITS AND MORE. I NCLUDED: 20’ OF 16/6 CABLE WITH TERMINALS

WIRELESS REMOTE CONTROL 2 OPTIONS

- 630020

WIRELESS REMOTE CONTROL WITH 2 OPTIONS, 20 AMPS FOR OVER 50M, ADAPTABLE TO 12V & 24V

WIRELESS REMOTE CONTROL 4 OPTIONS

- 630030

WIRELESS REMOTE CONTROL WITH 4 OPTIONS, 20 AMPS FOR OVER 50M, ADAPTABLE TO 12V & 24V

All numbers given are nominal values and should be used for reference only.

BATTERY TRAY

▶ 810800
BATTERY TRAY AND HOLDER WITH STRAP 7" x 10.5"

BATTERY CHARGER

▶ 640120
LOW AMP BATTERY CHARGER 115VAC to 12VDC @ 1.5 AMP

▶ 640135
BATTERY CHARGER 115VAC to 13.8VDC @ 5 AMP

SOLAR BATTERY CHARGER

▶ 640140
SOLAR BATTERY CHARGER 12V @ 250mA

BREAK AWAY KIT

▶ 640080 KIT

▶ 640090 REPLACEMENT SWITCH

BREAK AWAY SYSTEM FOR SINGLE OR TANDEM TRAILERS.
INCLUDED: 12V BATTERY

BATTERY CABLE #4 WITH 5/16" LUGS

▶ 610260 BLACK, 24" Long

▶ 610270 RED, 24" Long

▶ 630320 Y splice wireless quick connector, black 13', long

▶ 610240 RED, 18" Long

HYDRAULIC HOSE 3/8", 1 WIRE, FEMALE 3/8 JIC AND MALE 1/2" NPT

▶ 320011 17" Long

▶ 320030 24" Long

▶ 320050 36" Long

▶ 320060 48" Long

▶ 320070 60" Long

All product specifications are subject to change without prior notice.

POWER UNIT / UNITÉS DE PUISSANCE

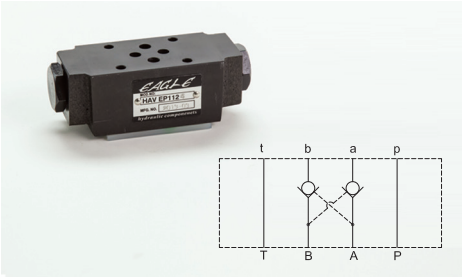

MODULAR PILOTED CHECK VALVE ON A AND B

	Max. Pressure	Max. Flow
▶ 122520 for D03 valve	3555 PSI	10.5 GPM
▶ 123500 for D05 valve	3555 PSI	21.0 GPM

MODULAR CROSS-OVER RELIEF VALVE, “A” AND “B”, PRESET 96 BAR

	Max. Pressure	Max. Flow
▶ 122530 for D03 valve	Adjust. 200 - 3555 PSI	10.5 GPM

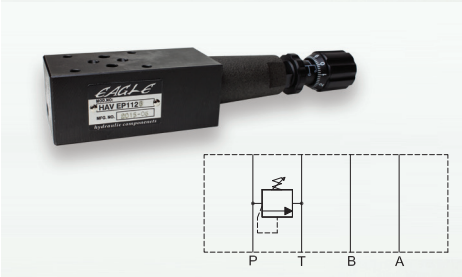

MODULAR RELIEF VALVE FROM “P” TO “T”

	Max. Pressure	Max. Flow
▶ 122540 for D03 valve	Adjust. 200 - 3555 PSI	10.5 GPM

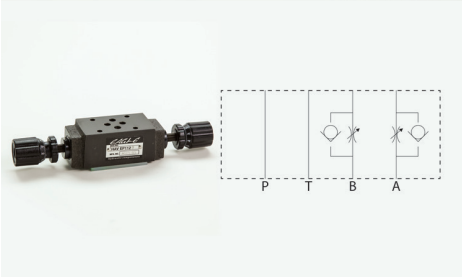

INDEPENDENT ADJUST. MODULAR FLOW “A” AND “B” UNIDIRECTIONAL

	Max. Pressure	Max. Flow
▶ 122550 for D03 valve	3555 PSI	10.5 GPM
▶ 123520 for D05 valve	3555 PSI	21.0 GPM

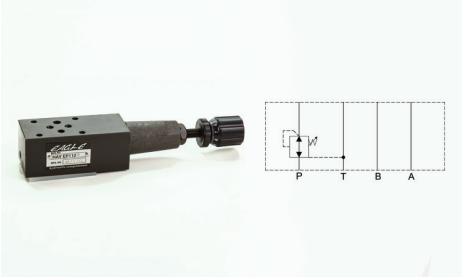

PRESSURE REDUCING VALVE FROM “P” TO “T”

	Max. Pressure	Max. Flow
▶ 122560 for D03 valve	3555 PSI	10.5 GPM

ADJUSTABLE FROM 2275 TO 500 PSI

DIRECTIONAL FLOW CONTROL VALVE

	Port	Max. Pressure	Max. Flow
▶ 100010	SAE06 9/16-18	5000 PSI	8.0 GPM
▶ 100020	SAE08 3/4-16	5000 PSI	10.5 GPM
▶ 100030	SAE10 7/8-14	5000 PSI	16.5 GPM

All numbers given are nominal values and should be used for reference only.

POWER UNIT / UNITÉS DE PUISSANCE

DIRECTIONAL VALVE WITH SUBPLATE MOUNT D02

12V, 24V, 110V

	Max. Pressure	Max. Flow
▶ 121100 Closed Center	4500 PSI	5.2 GPM
▶ 121120 Tandem Center	4500 PSI	5.2 GPM
▶ 121140 A & B > T	4500 PSI	5.2 GPM

DIRECTIONAL VALVE WITH SUBPLATE MOUNT D03

12V, 24V, 110V, 220V

Come standard with 304 stainless steel push pin manual override

	Max. Pressure	Max. Flow
▶ 122190 Closed Center	4500 PSI	18.5 GPM
▶ 122240 Tandem Center	4500 PSI	13.2 GPM
▶ 122280 A & B > T	4500 PSI	18.5 GPM

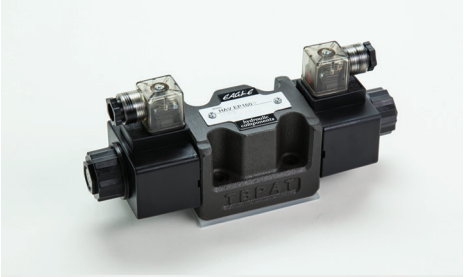

DIRECTIONAL VALVE WITH SUBPLATE MOUNT D05

12V, 24V, 110V, 220V

	Max. Pressure	Max. Flow
▶ 123100 Closed Center	4500 PSI	31.0 GPM
▶ 123130 Tandem Center	4500 PSI	21.0 GPM
▶ 123160 A & B > T	4500 PSI	31.0 GPM

DIN CONNECTORS

▶ 618200	DIN Connector 12/24v with LED Light
▶ 618210	DIN Connector 115/230v with LED Light

MANUAL DIRECTIONAL VALVE D02

	Max. Pressure	Max. Flow
▶ 122370 Closed Center	4500 PSI	5.2 GPM
▶ 122030 Tandem Center	4500 PSI	5.2 GPM
▶ 122040 A & B > T	4500 PSI	5.2 GPM

MANUAL DIRECTIONAL VALVE DO3

	Max. Pressure	Max. Flow
▶ 122360 Closed Center	4500 PSI	15.8 GPM
▶ 122000 Tandem Center	4500 PSI	15.8 GPM
▶ 122020 A & B > T	4500 PSI	15.8 GPM

All product specifications are subject to change without prior notice.

PARALLEL ALUMINUM MANIFOLD FOR D02 VALVES

- 200000 (For 4 x D02 Valve)

PARALLEL ALUMINUM MANIFOLD FOR D03 VALVES

- 200020 (For 1 x D03 Valve)
- 200030 (For 2 x D03 Valve)
- 200040 (For 3 x D03 Valve)
- 200010 (For 4 x D03 Valve)
- 303100 / 5/16-18 x 1/2” Support Bracket Bolts (4 per block)

RETURN FILTER HOUSING 3/4” NPT WITH 10 MICRON SPIN ON FILTER

- 150020 Adaptor 3/4” NPT
- 150021 Spin on

PRESSURE GAUGE, GLYCERIN FILLED AND STAINLESS HOUSING 1/4” NPT

- 900100 0-3000 PSI
- 900110 0-5000 PSI

**Other models available upon request*

ATMOSPHERIC BREATHER FOR SINGLE ACTING CYLINDER

- 318070 1/8” NPT
- 318060 3/8” NPT
- 318050 1/2” NPT
- 318080 7/16-20 (SAE #4)
- 318090 9/16-18 (SAE #6)
- 318100 3/4-16 (SAE #8)

VELOCITY FUSE FOR 9/16-18 (SAE #6)

- 100040 3 GPM
- 100050 7 GPM
- 100070 Adjustable

All numbers given are nominal values and should be used for reference only.

ALUMINUM TOOLBOX TRAY

- ▶ 810400 Aluminum Toolbox Tray - Left Side
- ▶ 810500 Aluminum Toolbox Tray - Right Side

2” BREATHER FILLER TUBE WITH 40 MICRONS SCREEN BASKET

- ▶ 520040

PRESSURE COMPENSATED FLOW CONTROL FOR RETURN PORT TO TANK

- ▶ 100500 9/16-18 SAE Max. 8.5 l/m

CUSTOMIZABLE OPTIONS

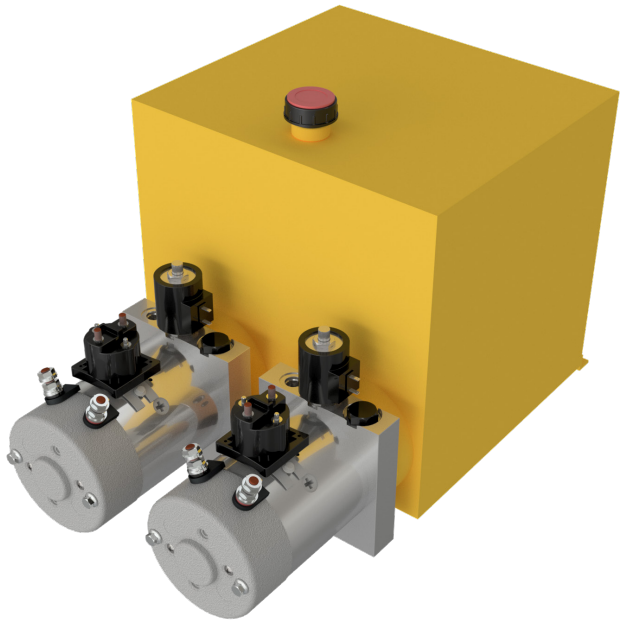

- SINGLE OR DOUBLE ACTING CONFIGURATION AND MORE...
- 3 RANGES OF MOTORS STANDARD, HEAVY DUTY & LONG DUTY
- POWER UP, DOWN OR BOTH
- MULTIPLE RELIEF VALVES AVAILABLE
- 12, 24, 115/230 VOLT AC 1 PH, 230/460/575 VOLT AC 3 PH
- PUMP FLOW 0.75cc TO 8.0 cc
- SHRINK TUBE COVERED WIRES
- MANUAL CONTROL, 2 OR 4 BUTTONS
- WIRELESS REMOTE - LONG RANGE
- 20’ CABLE MANUAL REMOTE
- LOWER AMPERAGE DRAW
- ISOLATED GROUND
- LOW NOISE
- TESTED AT 3000PSI
- MINIMAL REBOUND SOLENOID
- METAL OR PLASTIC TANK, ROUND OR SQUARE
- PUMP INDEPENDANTLY TESTED FOR 300, 000 CYCLES

All product specifications are subject to change without prior notice.

QH™ HYDRAULIC POWER UNIT

Designed and assembled in Quebec Canada, QH™ Hydraulic Power Units are built with quality in mind. QH™ power units are rugged enough to withstand the harsh cold and winter conditions of Canada to the booming heat in the south. We have partnered only with the best suppliers to ensure that our Power Units are powerful rugged and reliable. We have many options for you to consider, QH™Power Units are completely customizable to suit your application requirements.

Our hydraulic power unit is a perfect choice when mated with one of our hydraulic cylinders such as our QHTC Telescopic or any of our other hydraulic cylinder options. You can find QH™ hydraulic power units installed on many equipment across North America, including dump trailers, aerial ladder trucks, lift tables and the list goes on...

Tested to perfection, every QH™Hydraulic Power Unit goes through a thorough pressure test to assure compliance and quality expectations.

- SINGLE OR DOUBLE ACTING CONFIGURATION AND MORE...
- 3 RANGES OF MOTORS STANDARD, HEAVY DUTY & LONG DUTY
- 12, 24 VOLT DC
- 115/230 VOLT AC - SINGLE PHASE
- 230/460/575 VOLT AC - THREE PHASE
- POWER UP, DOWN OR BOTH
- MULTIPLE RELIEF VALVES
- PUMP FLOW 0.8 cc TO 8.0 cc
- SHRINK TUBE COVERED WIRES
- WIRELESS REMOTE - LONG RANGE
- 20' CABLE MANUAL REMOTE
- MANUAL CONTROL, 2 OR 4 BUTTONS
- MINIMAL REBOUND SOLENOID
- LOWER AMPERAGE DRAW
- ISOLATED GROUND
- LOW NOISE
- TESTED AT UP TO 3500PSI

POWER UNIT STORAGE

- Steel Power Unit reservoir should be filled to prevent corrosion since ambient temperature change can results in moisture forming on the inside of the tank causing spot rusting and pitting of the tank surface.
- All Power Unit electrical connections (terminations) must be coated with corrosion inhlbitors.
- Power Supply should be disconnected from the power unit.
- Single acting power unit should have the manual override valve open.

All numbers given are nominal values and should be used for reference only.

HYDRAULIC PRODUCT

SAFETY

- Always wear eye protection and protective clothing when working on and around hydraulic systems.
- Never exhaust hydraulic fluid under pressure to atmosphere.
- Hydraulic fluid can reach high temperatures under normal operating conditions and can burn exposed skin.
- Fluid pressure can penetrate skin and cause death or serious injury, Wear proper protective clothing when working on hydraulics.
- Hydraulic devices should be properly “Locked-Out” or “Tagged-Out” before being worked on, including the release of any stored energy or pressure. Ensure a mechanical locking device is in place to prevent injury or death.
- QH™ is not responsible for misuse or misapplication of product.
- Do not use any heat-producing equipment such as oxyacetylene/gas torches and angle grinders on sealed hydraulic cylinders.
- Remove hydraulic oil from the cylinder before heating the cylinder.
- Never operate a cylinder(or power unit) above recommended pressures.
- Always use properly rated hoses and fittings.
- Do not weld, add welded items, drill holes or otherwise modify the cylinder from its original design.
- The hydraulic power unit may heat up during operation. The solenoids in the hydraulic power unit become so hot during operation that you may sustain burns. You should wear heat-proof gloves or protective clothing.

YOUR ONE STOP SOLUTION FOR TRAILER APPLICATION

* BRACKETS AND H-BEAM SUPPLIED UNPAINTED

All numbers given are nominal values and should be used for reference only.