QH™ ADAPTEURS CHARGE AXIALE
AXIAL LOAD ADAPTORS

MONTAGES SAE & AUTRES
SAE & OTHERS MOUNTING

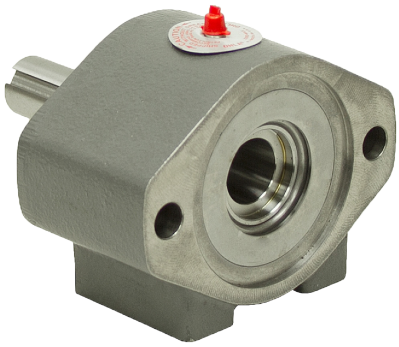
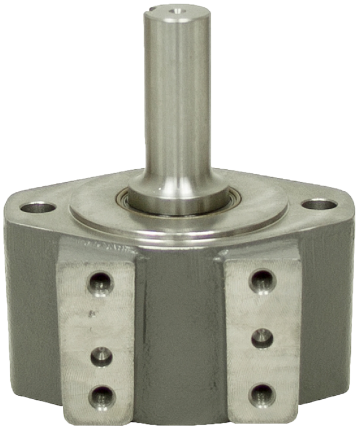
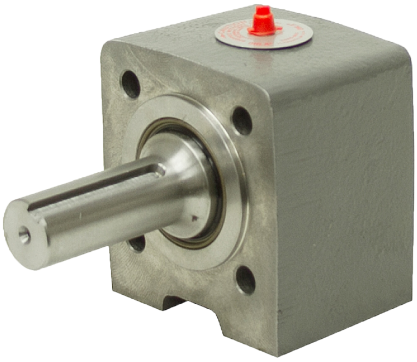
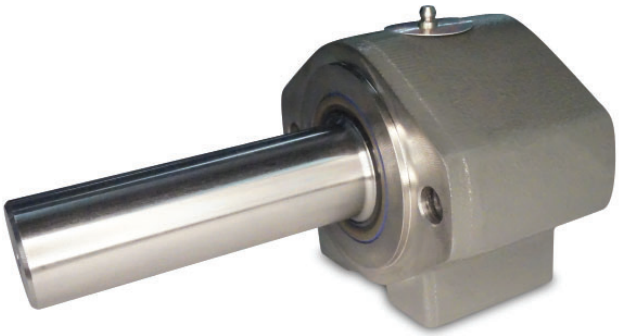
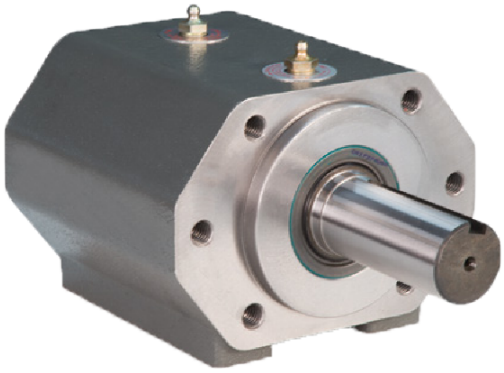
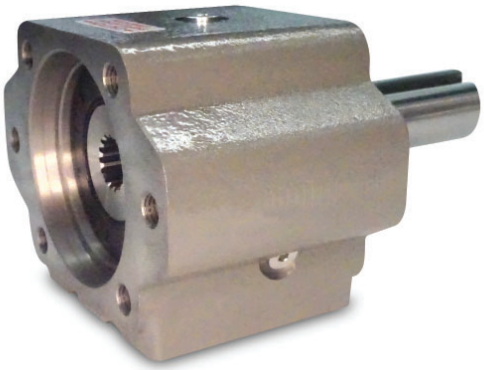
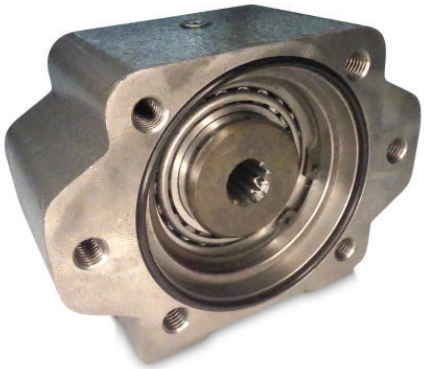

www.QuebecHydraulique.com™

QHLA Series

LOAD ADAPTORS / ADAPTEURS CHARGE

Du plus petit support **QHLA200 SAE A** au plus grand montage **QHLA1500 SAE F**, les QHLA sont dotés de boitiers robustes en fonte, d'arbres en acier résistant aux contraintes de 130 000 PSI, de roulements à billes, coniques ou à rotule sur rouleaux, très différents options d'arbre et logements joliment peints. Tous les modèles peuvent être montés sur la face ou sur la base.

From the smallest **QHLA200 SAE A** mount to the largest **QHLA1500 SAE F** mount, QHLAs feature rugged housings of cast iron, shafts of 130,000 PSI stress proof steel, ball, tapered, or spherical roller bearings, many different shaft options and attractively painted housings. All models may be either face-or foot-mounted.

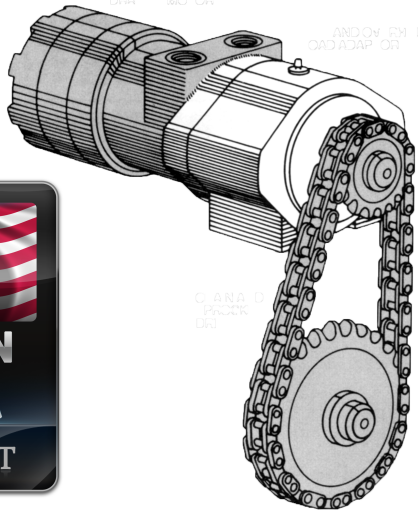

- Élimine les défaillances prématurées des moteurs ou pompes en raison de charges suspendues (axiales et radiales) sur l'arbre.
- Empêche la contamination du fluide hydraulique dans les environnements difficiles.
- Fournit une surface de montage solide et permanente.
- Permet de retirer les moteurs hydrauliques pour l'entretien sans déranger les engrenages entraînés, les poulies ou les pignons.
- Scelle contre la saleté, la crasse et autres contaminants

- Eliminates premature motor or pump failure due to overhung loads (axial and radial) on your motor or pump shaft.
- Prevents contamination of hydraulic fluid in harsh environments.
- Provides a solid, permanent mounting surface.
- Permits the removal of hydraulic motors for servicing without disturbing driven gears, pulleys or sprockets.
- Seals out dirt, grime, and other contaminants.

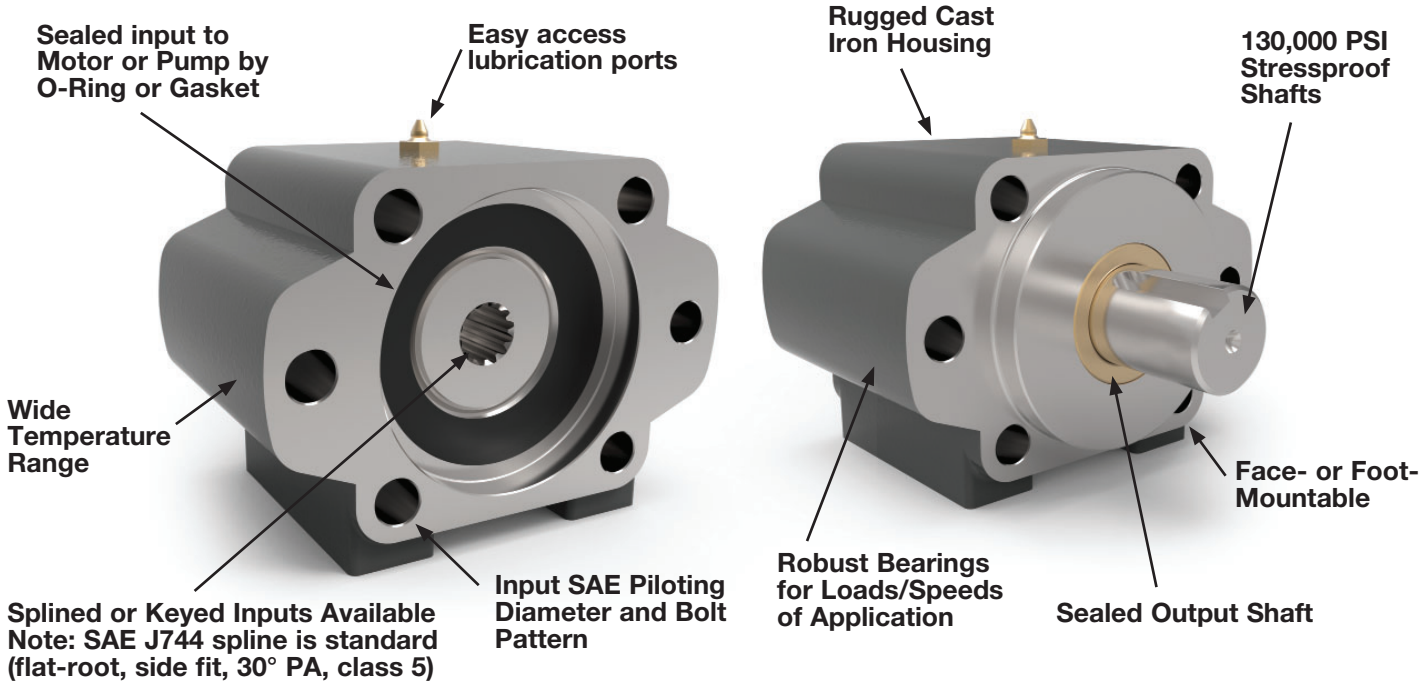

SELECTION
LIENS RAPIDES / QUICK LINKS

LOAD ADAPTORS / ADAPTEURS CHARGE

SAE A 2-bolt mounting
Input Pilot Diameter 3.250"

Non-SAE 4-bolt mounting
Input Pilot Diameter 1.750"

SAE A 2-bolt / 4-bolt mounting
Magneto
Input Pilot Diameter 3.250"

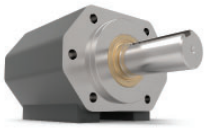

SAE B 2-bolt / 4-bolt mounting
Input Pilot Diameter 4.000"

SAE C 2-bolt / 4-bolt mounting
Input Pilot Diameter 5.000"

SAE D 2-bolt / 4-bolt mounting
Input Pilot Diameter 6.000"

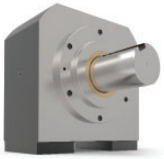

SAE E 4-bolt mounting
Input Pilot Diameter 6.500"

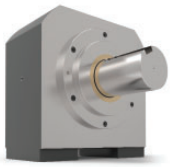

SAE F 4-bolt mounting
Input Pilot Diameter 7.000"

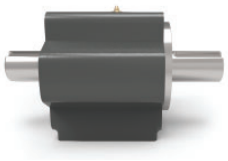

DOUBLE MALE
SAE Face / Foot Mounting

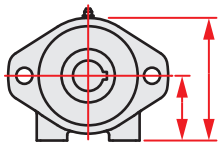

SIZING & CALCULATIONS

QHLA SPECIALS

LOAD ADAPTORS / ADAPTEURS CHARGE

QHLA210 Series

DESCRIPTION

Input Standard	SAE A 2-bolt
Input Pilot Diameter	3.250"
Input Pilot Depth	(standard housing) 0.125" (deep pilot option) 0.250"
Input Pilot Sealing Method	Buna-N Gasket
Input Bore Diameter and Depth	1" keyed - bore depth is 2.31" 5/8" keyed - bore depth is 2.31" 3/4" keyed - bore depth is 2.81" 9 tooth 16/32 spline - bore depth is 1.68"
Output Shaft Diameter	1"
Output Shaft Keyway	1/4" x 1/8" keyway
Output Shaft Keyway Length	2.13"
Output Shaft Length	2.87"
Output Shaft Seal Type	Double-lip with Garter Spring
Output Pilot Diameter	3.250"
Output Pilot Height	0.120"
Shaft Material	1144 Stressproof Steel
Bearing Type	Deep Groove Ball Bearings
Standard Lubrication Method	Grease
Optional Lubrication Methods	Please Consult Factory
Grease Fitting	(1) Standard Zerk Fitting
Grease Capacity	Minimum 0.5 oz. Maximum 1.0 oz.
Grease Type (recommended for typical applications)	NLGI #2
Recommended Grease Base	Lithium
Standard Mounting Orientation	Shaft Horizontal - Consult Factory for other Mounting Orientations
Maximum Speed Without Modification	3800 RPM
Housing Material	Cast Iron
Housing Feet - Threaded Holes	(4) 3/8"-16 UNC x 0.68" deep
Housing Grease Ports	Press-fit Zerk Fitting
Unit Weight	10.0 lbs

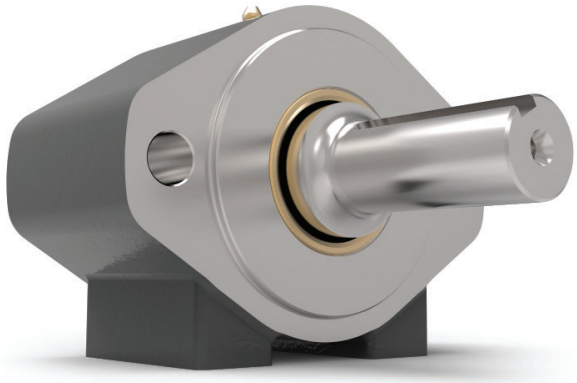

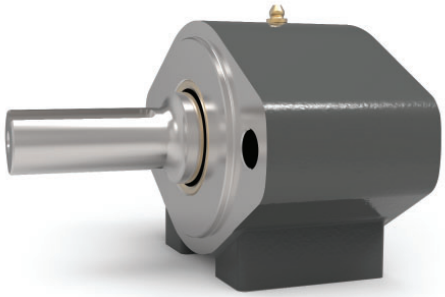

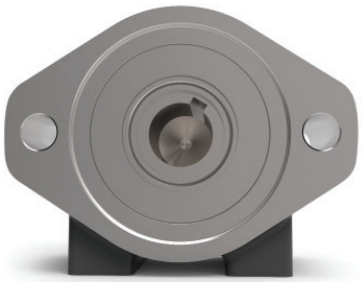

QHLA210 Series

DIMENSIONS

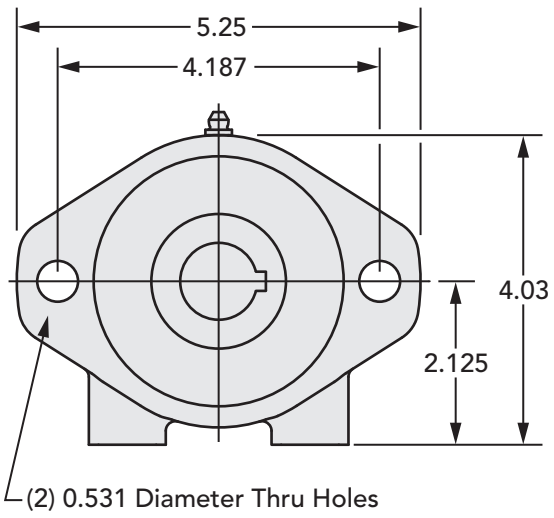

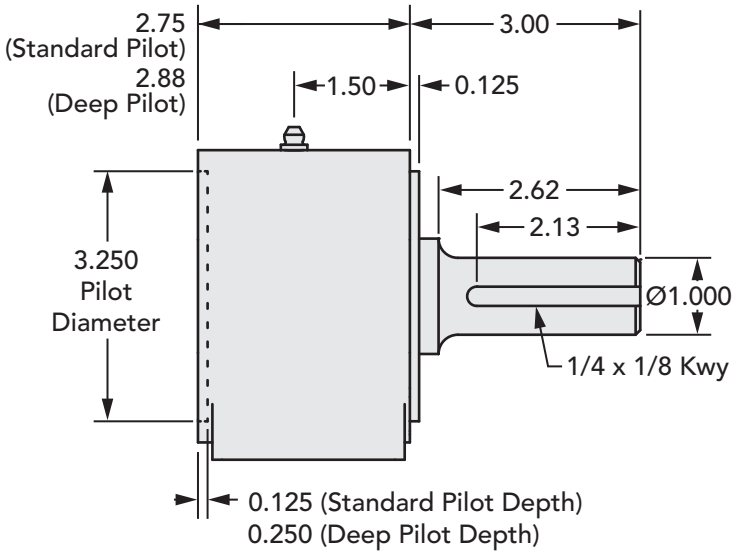

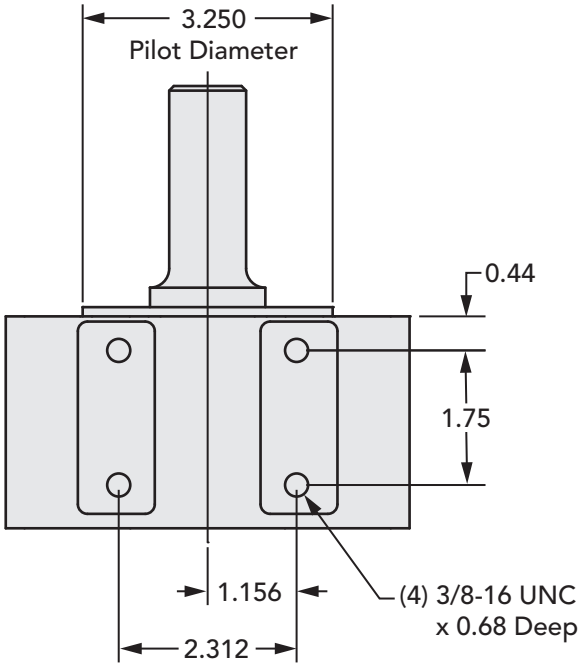

CODE

Part Number	Output Shaft - Keyway	Input Bore - Keyway
QHLA210	1" - 1/4 x 1/8	1" - 1/4 x 1/8
QHLA210-DP	1" - 1/4 x 1/8	1" - 1/4 x 1/8
QHLA210-9S	1" - 1/4 x 1/8	9 Tooth 16/32 Spline
QHLA210-9S-DP	1" - 1/4 x 1/8	9 Tooth 16/32 Spline
QHLA210-10	1" - 1/4 x 1/8	5/8" - 5/32 x 5/64
QHLA210-10-DP	1" - 1/4 x 1/8	5/8" - 5/32 x 5/64
QHLA210-12	1" - 1/4 x 1/8	3/4" - 3/16 x 3/32
QHLA210-12-DP	1" - 1/4 x 1/8	3/4" - 3/16 x 3/32

Note: Part numbers with -DP on the end call out a Deep pilot option.
Standard pilot depth is 0.125" and the Deep pilot depth is 0.250"

LOAD ADAPTORS / ADAPTEURS CHARGE

QHLA210F Series

DESCRIPTION

Input Standard	SAE A 2-bolt
Input Pilot Diameter	3.250"
Input Pilot Depth	(standard housing) 0.125" (deep pilot option) 0.250"
Input Pilot Sealing Method	Buna-N Gasket
Input Bore Diameter and Depth	1" through-bore
Output Shaft Diameter	1" through-bore
Output Shaft Keyway	1/4" x 1/8" keyway entire length of bore
Output Shaft Length	0.62" extension
Output Shaft Seal Type	Double-lip with Garter Spring
Output Pilot Diameter	3.250"
Output Pilot Height	0.120"
Shaft Material	1144 Stressproof Steel
Bearing Type	Deep Groove Ball Bearings
Standard Lubrication Method	Grease
Optional Lubrication Methods	Please Consult Factory
Grease Fitting	(1) Standard Zerk Fitting
Grease Capacity	Minimum 0.5 oz. Maximum 1.0 oz.
Grease Type (recommended for typical applications)	NLGI #2
Recommended Grease Base	Lithium
Standard Mounting Orientation	Shaft Horizontal - Consult Factory for other Mounting Orientations
Maximum Speed Without Modification	3800 RPM
Housing Material	Cast Iron
Housing Feet - Threaded Holes	(4) 3/8"-16 UNC x 0.68" deep
Housing Grease Ports	Press-fit Zerk Fitting
Unit Weight	10.0 lbs

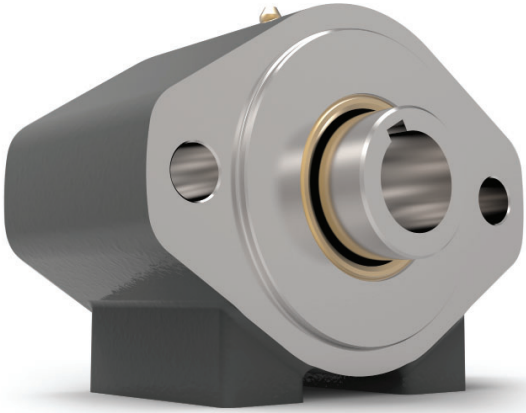

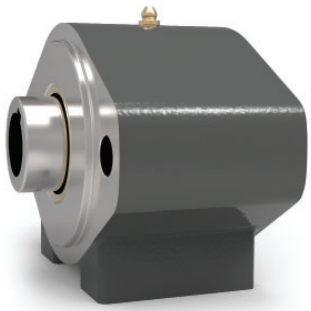

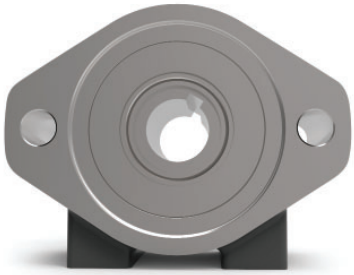

QHLA210F Series

DIMENSIONS

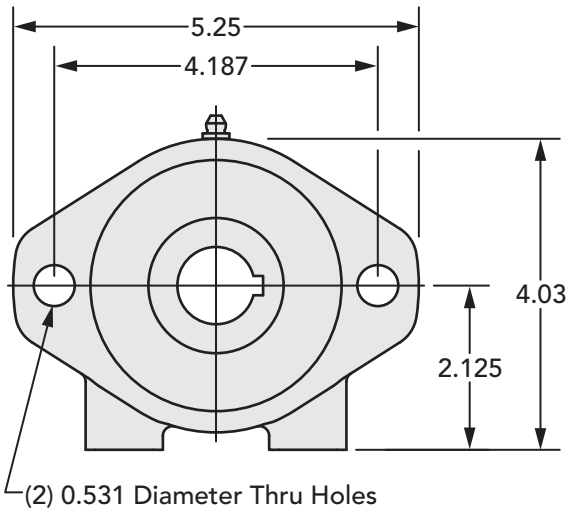

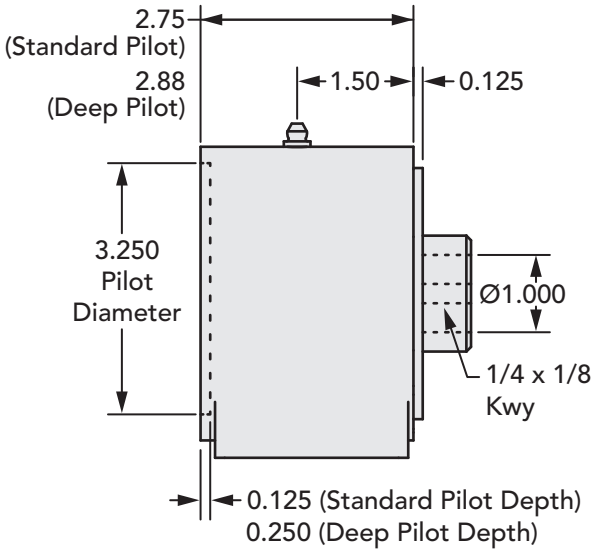

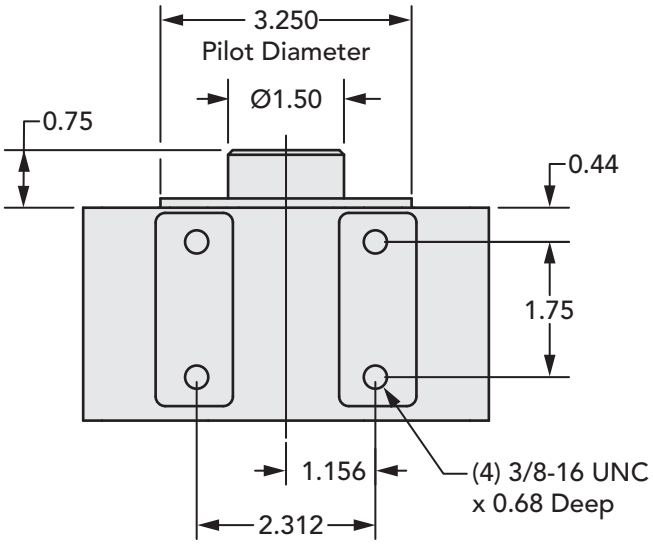

CODE

Part Number	Output Shaft - Keyway	Input Bore - Keyway
QHLA210F	1" bore - 1/4 x 1/8	1" - 1/4 x 1/8
QHLA210F-DP	1" bore - 1/4 x 1/8	1" - 1/4 x 1/8

Note: Part numbers with -DP on the end call out a Deep pilot option.
Standard pilot depth is 0.125" and the Deep pilot option is 0.250"

QHLA215 Series

DESCRIPTION

Input Standard	SAE A 2-bolt
Input Pilot Diameter	3.250"
Input Pilot Depth	(standard housing) 0.125" (deep pilot option) 0.250"
Input Pilot Sealing Method	Buna-N Gasket
Input Bore Diameter and Depth	1" keyed - bore depth is 2.31" 3/4" keyed - bore depth is 2.81"
Output Shaft Diameter	1-1/2"
Output Shaft Keyway	3/8" x 3/16" keyway
Output Shaft Keyway Length	2.06"
Output Shaft Length	2.87"
Output Shaft Seal Type	Double-lip with Garter Spring
Output Pilot Diameter	3.250"
Output Pilot Height	0.120"
Shaft Material	1144 Stressproof Steel
Bearing Type	Deep Groove Ball Bearings
Standard Lubrication Method	Grease
Optional Lubrication Methods	Please Consult Factory
Grease Fitting	(1) Standard Zerk Fitting
Grease Capacity	Minimum 0.5 oz. Maximum 1.0 oz.
Grease Type (recommended for typical applications)	NLGI #2
Recommended Grease Base	Lithium
Standard Mounting Orientation	Shaft Horizontal - Consult Factory for other Mounting Orientations
Maximum Speed Without Modification	3800 RPM
Housing Material	Cast Iron
Housing Feet - Threaded Holes	(4) 3/8"-16 UNC x 0.68" deep
Housing Grease Ports	Press-fit Zerk Fitting
Unit Weight	10.0 lbs

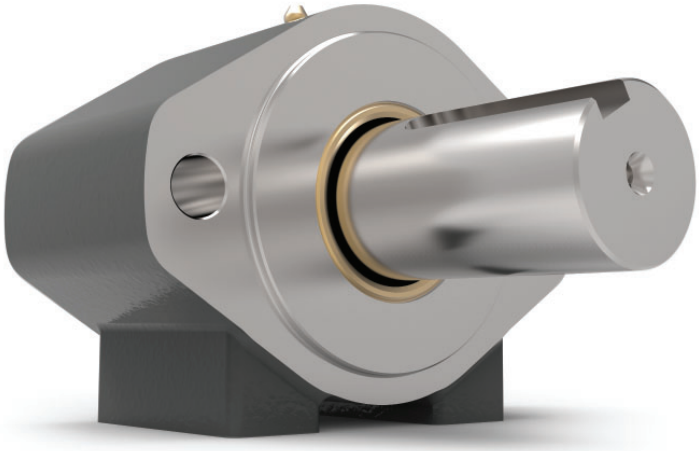

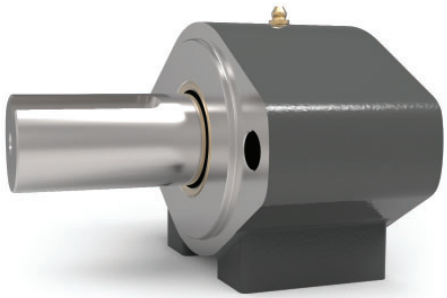

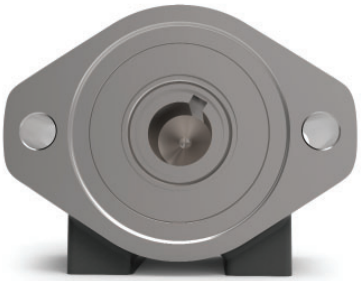

QHLA215 Series

DIMENSIONS

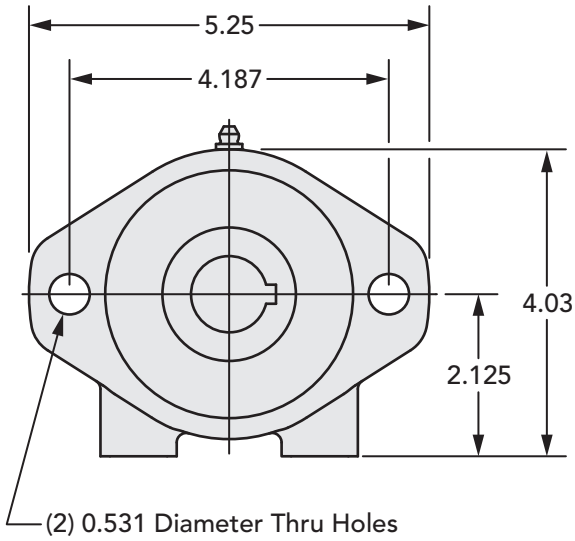

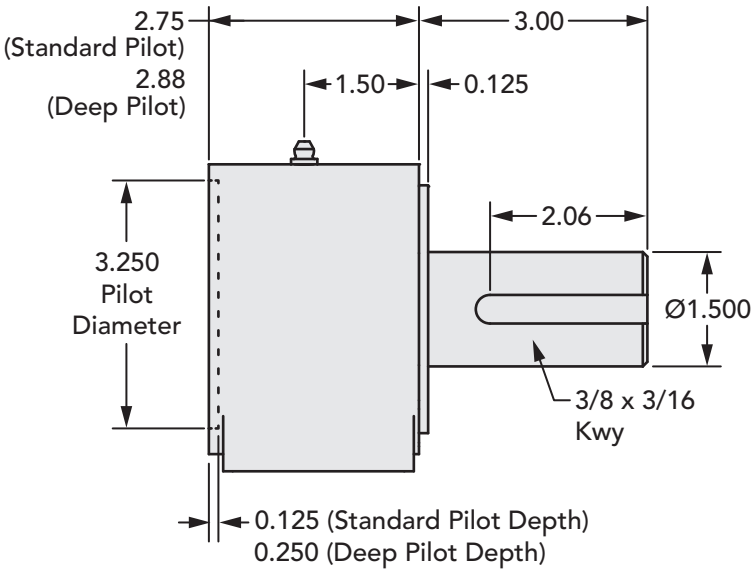

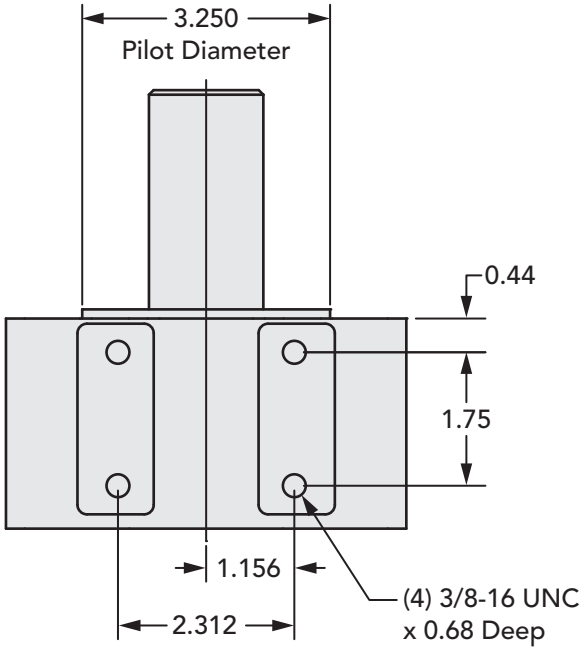

CODE

Part Number	Output Shaft - Keyway	Input Bore - Keyway
QHLA215	1-1/2" - 3/8 x 3/16	1" - 1/4 x 1/8
QHLA215-DP	1-1/2" - 3/8 x 3/16	1" - 1/4 x 1/8
QHLA215-12	1-1/2" - 3/8 x 3/16	3/4" - 3/16 x 3/32
QHLA215-12-DP	1-1/2" - 3/8 x 3/16	3/4" - 3/16 x 3/32

Note: Part numbers with -DP on the end call out a Deep pilot option.
Standard pilot depth is 0.125" and the Deep pilot option is 0.250"

QHLA300F Series

DESCRIPTION

Input Standard	SAE A 2-bolt
Input Pilot Diameter	3.250"
Input Pilot Depth	(standard housing) 0.125" (deep pilot option) 0.250"
Input Pilot Sealing Method	Buna-N Gasket
Input Bore Diameter and Depth	1-1/4" through-bore
Output Shaft Diameter	1-1/4" through-bore
Output Shaft Keyway	5/16" x 5/32" keyway the entire length of the bore
Output Shaft Length	1.00" extension
Output Shaft Seal Type	Double-lip with Garter Spring
Output Pilot Diameter	3.250"
Output Pilot Height	0.125"
Shaft Material	1144 Stressproof Steel
Bearing Type	Deep Groove Ball Bearings
Standard Lubrication Method	Grease
Optional Lubrication Methods	Please Consult Factory
Grease Fitting	(1) Standard Zerk Fitting
Grease Capacity	Minimum 0.7 oz. Maximum 1.4 oz.
Grease Type (recommended for typical applications)	NLGI #2
Recommended Grease Base	Lithium
Standard Mounting Orientation	Shaft Horizontal - Consult Factory for other Mounting Orientations
Maximum Speed Without Modification	3100 RPM
Housing Material	Cast Iron
Housing Feet - Threaded Holes	(4) 3/8"-16 UNC x 0.68" deep
Housing Grease Ports	Press-fit Zerk Fitting
Unit Weight	10.0 lbs

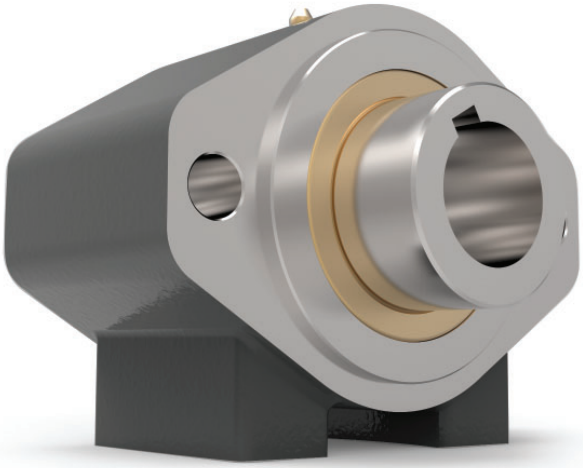

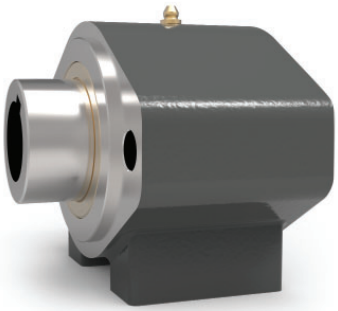

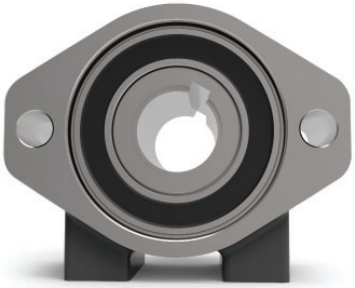

QHLA300F Series

DIMENSIONS

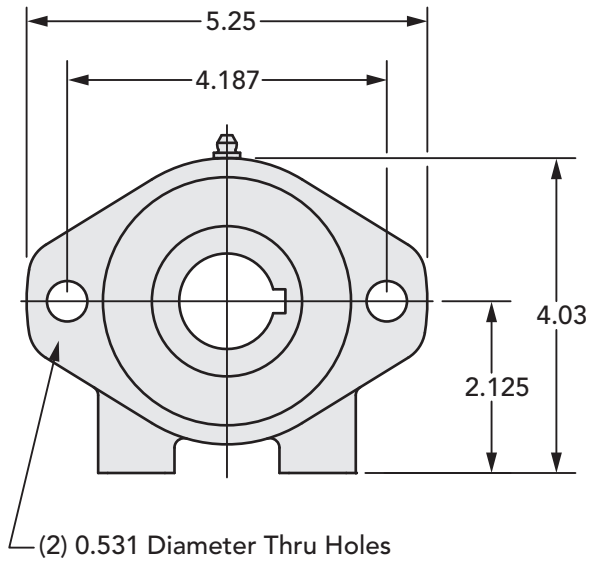

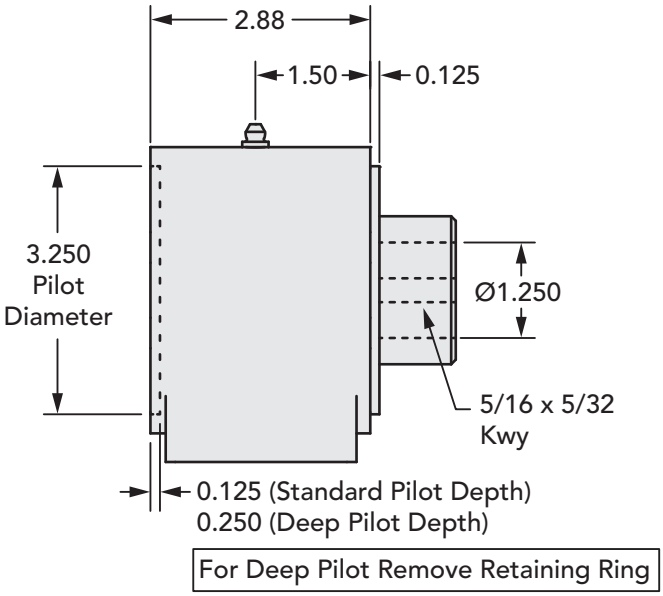

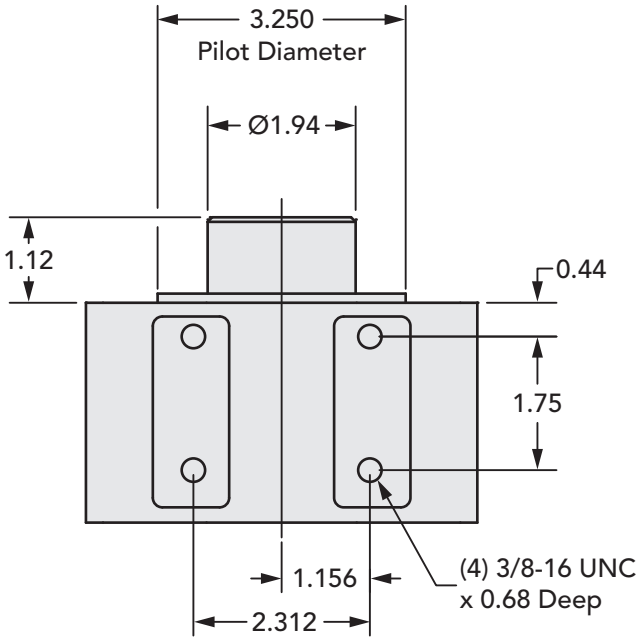

CODE

Part Number	Output Shaft - Keyway	Input Bore - Keyway
QHLA300F	1-1/4" bore - 5/16 x 5/32	1-1/4" - 5/16 x 5/32
QHLA300F-DP	1-1/4" bore - 5/16 x 5/32	1-1/4" - 5/16 x 5/32

Note: Part numbers with -DP on the end call out a Deep pilot option.
Standard pilot depth is 0.125" and the Deep pilot option is 0.250"

QHLA312 Series

DESCRIPTION

Input Standard	SAE A 2-bolt
Input Pilot Diameter	3.250"
Input Pilot Depth	(standard housing) 0.125" (deep pilot option) 0.250"
Input Pilot Sealing Method	Buna-N Gasket
Input Bore Diameter and Depth	1-1/4" keyed - bore depth is 2.37 inches
Output Shaft Diameter	1-1/4"
Output Shaft Keyway	5/16" x 5/32" keyway
Output Shaft Keyway Length	2.02"
Output Shaft Length	2.75"
Output Shaft Seal Type	Double-lip with Garter Spring
Output Pilot Diameter	3.250"
Output Pilot Height	0.125"
Shaft Material	1144 Stressproof Steel
Bearing Type	Deep Groove Ball Bearings
Standard Lubrication Method	Grease
Optional Lubrication Methods	Please Consult Factory
Grease Fitting	(1) Standard Zerk Fitting
Grease Capacity	Minimum 0.7 oz. Maximum 1.4 oz.
Grease Type (recommended for typical applications)	NLGI #2
Recommended Grease Base	Lithium
Standard Mounting Orientation	Shaft Horizontal - Consult Factory for other Mounting Orientations
Maximum Speed Without Modification	3100 RPM
Housing Material	Cast Iron
Housing Feet - Threaded Holes	(4) 3/8"-16 UNC x 0.68" deep
Housing Grease Ports	Press-fit Zerk Fitting
Unit Weight	10.0 lbs

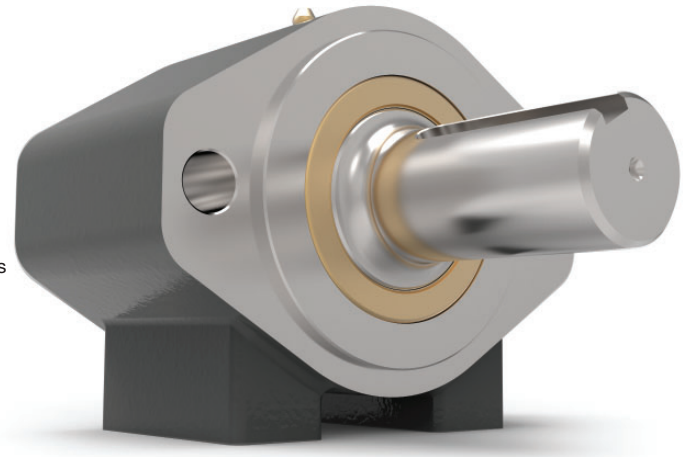

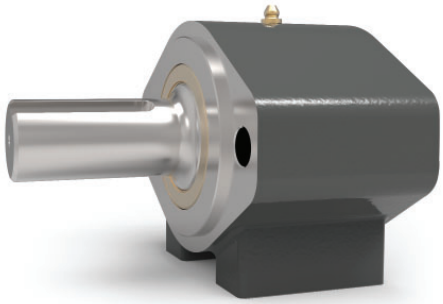

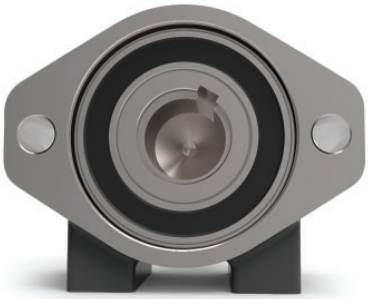

QHLA312 Series

DIMENSIONS

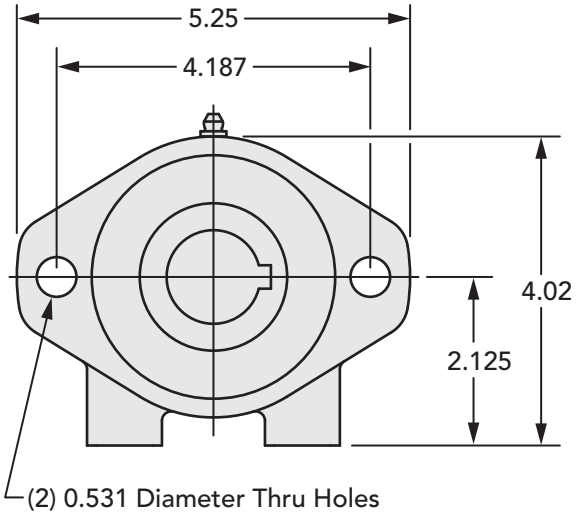

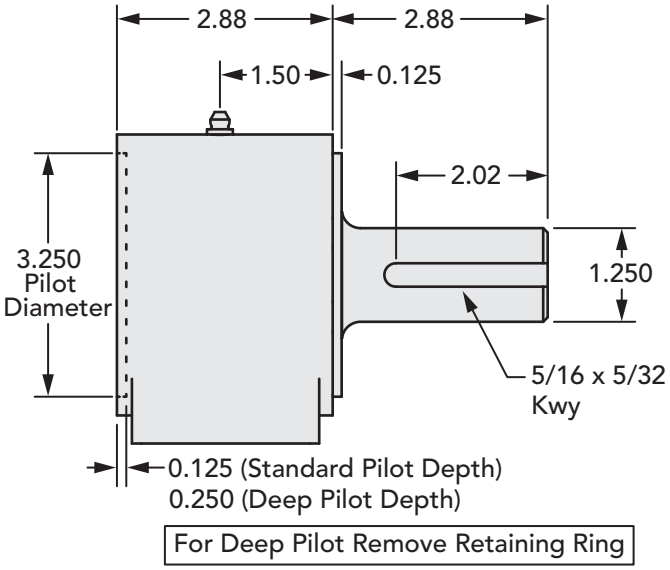

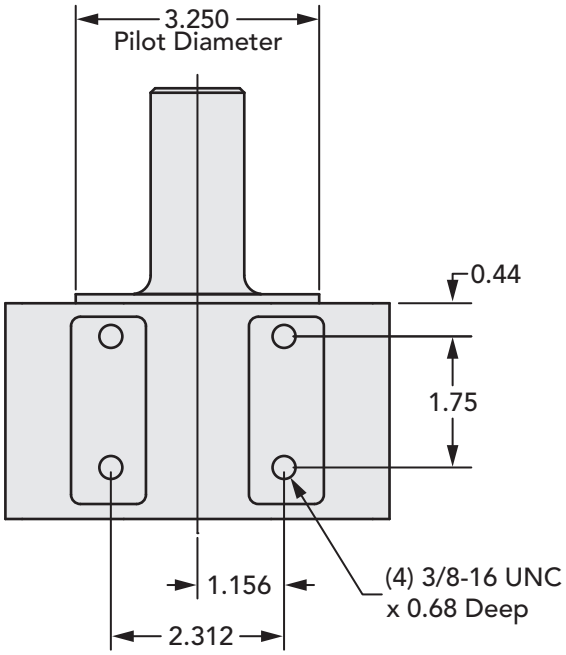

CODE

Part Number	Output Shaft - Keyway	Input Bore - Keyway
QHLA312	1-1/4" - 5/16 x 5/32	1-1/4" - 5/16 x 5/32
QHLA312-DP	1-1/4" - 5/16 x 5/32	1-1/4" - 5/16 x 5/32

Note: Part numbers with -DP on the end call out a Deep pilot option.
Standard pilot depth is 0.125" and the Deep pilot option is 0.250"

QHLA315 Series

DESCRIPTION

Input Standard	SAE A 2-bolt
Input Pilot Diameter	3.250"
Input Pilot Depth	(standard housing) 0.125" (deep pilot option) 0.250"
Input Pilot Sealing Method	Buna-N Gasket
Input Bore Diameter and Depth	1-1/4" keyed - bore depth is 2.37 inches
Output Shaft Diameter	1-1/2"
Output Shaft Keyway	3/8" x 3/16" keyway
Output Shaft Keyway Length	2.00"
Output Shaft Length	2.75"
Output Shaft Seal Type	Double-lip with Garter Spring
Output Pilot Diameter	3.250"
Output Pilot Height	0.125"
Shaft Material	1144 Stressproof Steel
Bearing Type	Deep Groove Ball Bearings
Standard Lubrication Method	Grease
Optional Lubrication Methods	Please Consult Factory
Grease Fitting	(1) Standard Zerk Fitting
Grease Capacity	Minimum 0.7 oz. Maximum 1.4 oz.
Grease Type (recommended for typical applications)	NLGI #2
Recommended Grease Base	Lithium
Standard Mounting Orientation	Shaft Horizontal - Consult Factory for other Mounting Orientations
Maximum Speed Without Modification	3100 RPM
Housing Material	Cast Iron
Housing Feet - Threaded Holes	(4) 3/8"-16 UNC x 0.68" deep
Housing Grease Ports	Press-fit Zerk Fitting
Unit Weight	10.0 lbs

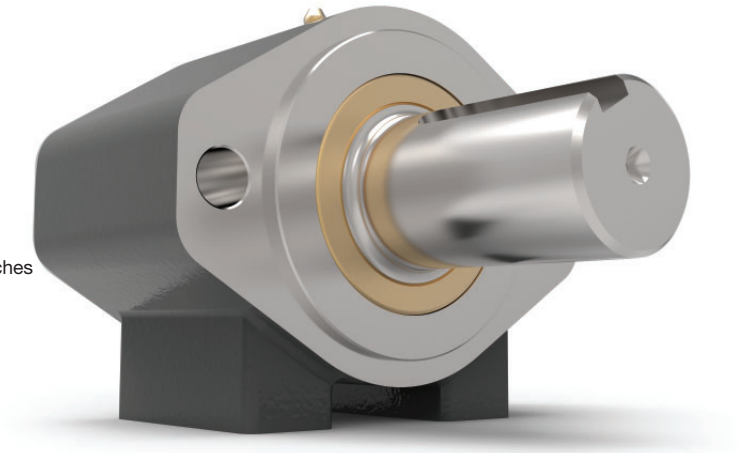

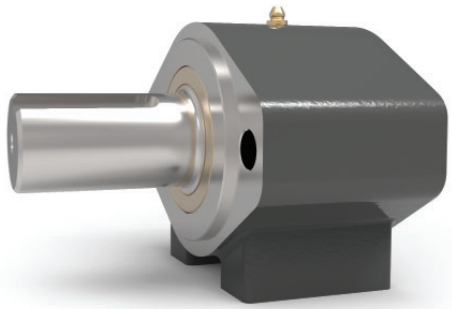

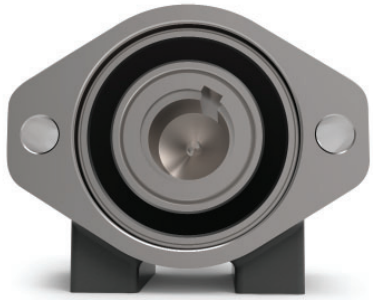

QHLA315 Series

DIMENSIONS

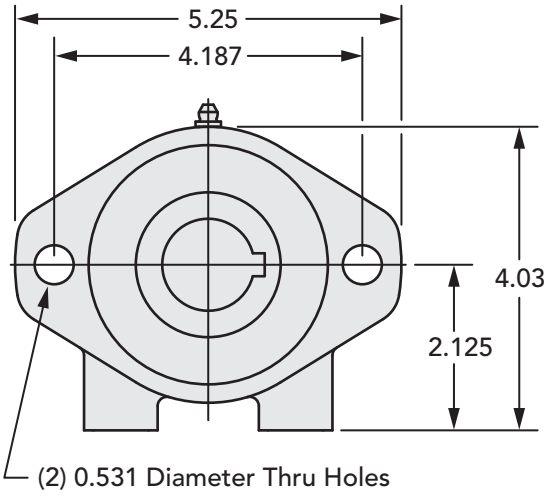

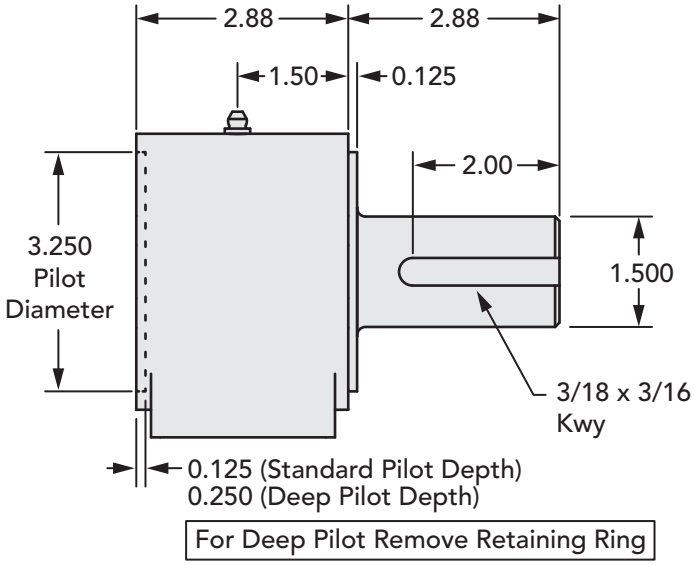

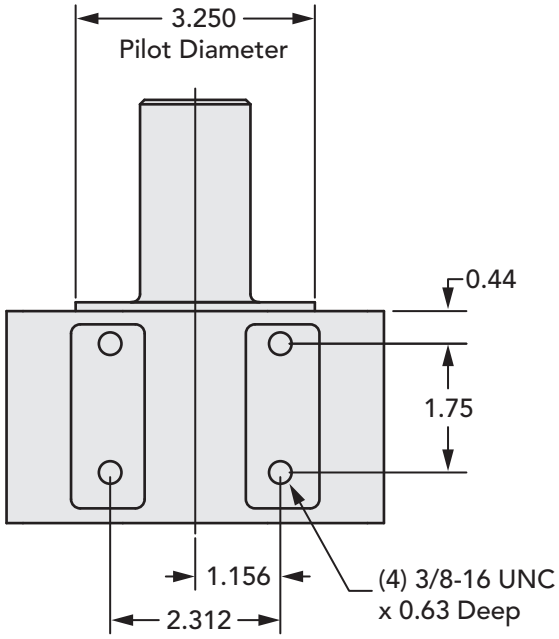

CODE

Part Number	Output Shaft - Keyway	Input Bore - Keyway
QHLA315	1-1/2" - 3/8 x 3/16	1-1/4" - 5/16 x 5/32
QHLA315-DP	1-1/2" - 3/8 x 3/16	1-1/4" - 5/16 x 5/32

Note: Part numbers with -DP on the end call out a Deep pilot option.
Standard pilot depth is 0.125" and the Deep pilot option is 0.250"

QHLA410 Series

DESCRIPTION

Input Standard	Non- SAE 4-bolt mount (designed to fit a popular LSHT Geroler motor)
Input Pilot Diameter	1.750"
Input Pilot Depth	0.125"
Input Pilot Sealing Method	Fiber Gasket
Input Bore Diameter and Depth	1" keyed - bore depth is 2.18"
Output Shaft Diameter	1"
Output Shaft Keyway	1/4" x 1/8" keyway
Output Shaft Keyway Length	2.13"
Output Shaft Length	2.87"
Output Pilot Diameter	2.500"
Output Pilot Height	0.125"
Shaft Material	1144 Stressproof Steel
Bearing Type	Deep Groove Ball Bearings
Standard Lubrication Method	Grease
Optional Lubrication Methods	Please Consult Factory
Grease Fitting	(1) Standard Zerk Fitting
Grease Capacity	Minimum 0.4 oz. Maximum 1.0 oz.
Grease Type (recommended for typical applications)	NLGI #2
Recommended Grease Base	Lithium
Standard Mounting Orientation	Shaft Horizontal - Consult Factory for other Mounting Orientations
Maximum Speed Without Modification	3800 RPM
Housing Material	Cast Iron
Housing Feet - Threaded Holes	(4) 3/8"-16 UNC x 0.68" deep
Housing Grease Ports	Press-fit Zerk Fitting
Unit Weight	10.0 lbs

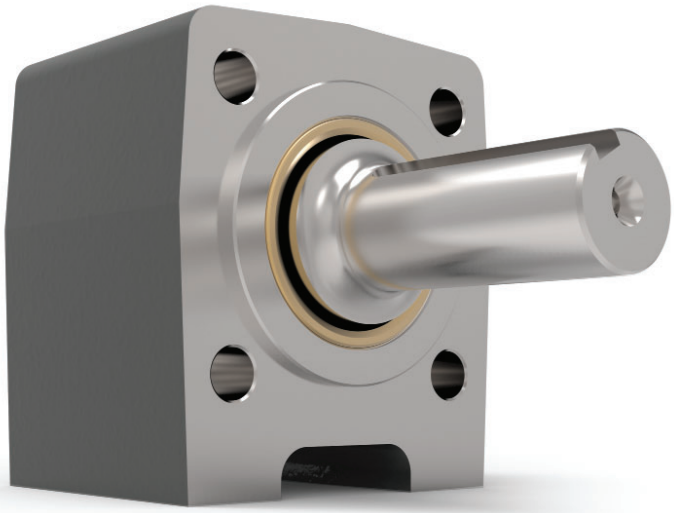

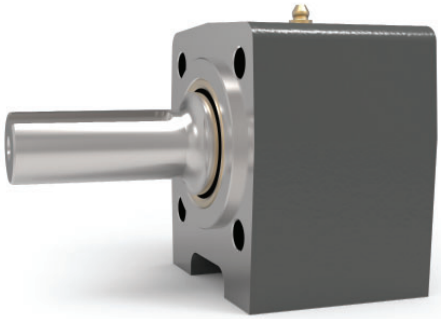

QHLA410 Series

DIMENSIONS

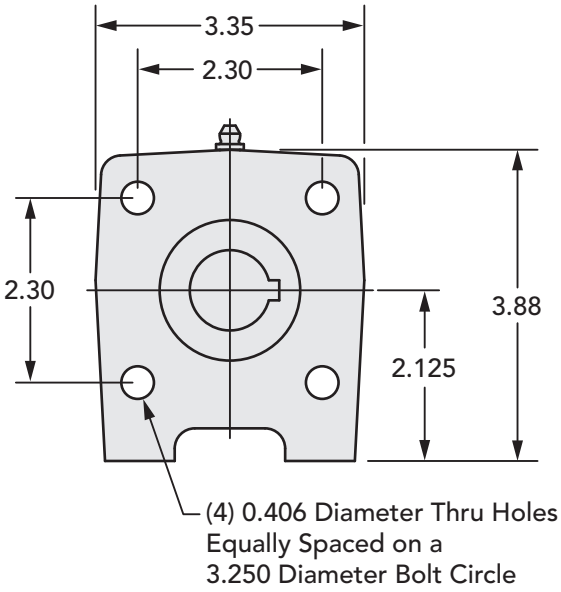

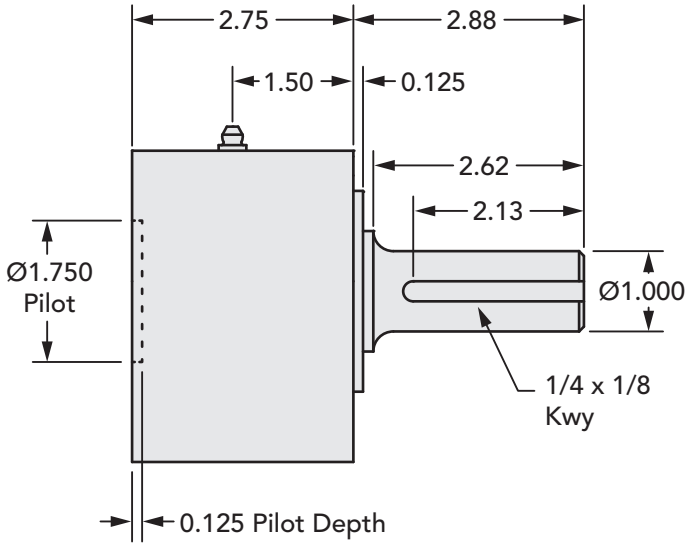

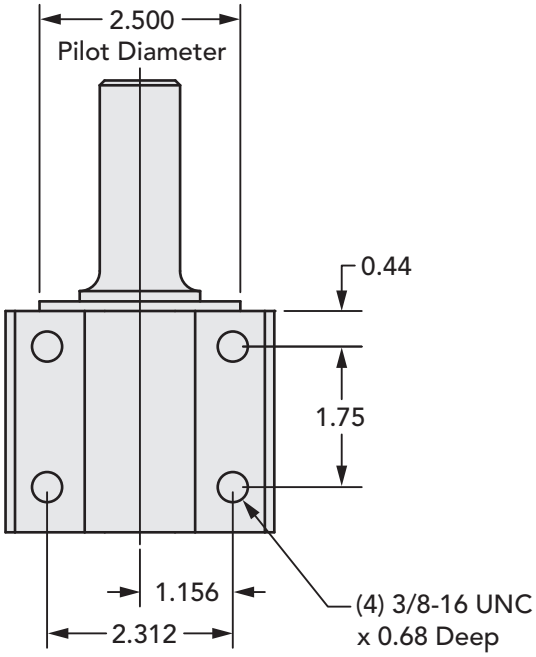

CODE

Part Number	Output Shaft - Keyway	Input Bore - Keyway
QHLA410	1" - 1/4 x 1/8	1" - 1/4 x 1/8

QHLA410F Series

DESCRIPTION

Input Standard	Non-SAE 4-bolt mount (designed to fit a popular LSHT Geroler motor)
Input Pilot Diameter	1.750"
Input Pilot Depth	0.125"
Input Pilot Sealing Method	Fiber Gasket
Input Bore Diameter and Depth	1" through-bore
Output Shaft Diameter	1" through-bore
Output Shaft Keyway	1/4" x 1/8" keyway the entire length of the bore
Output Shaft Length	0.50" extension
Output Shaft Seal Type	Double-lip with Garter Spring
Output Pilot Diameter	2.500"
Output Pilot Height	0.125"
Shaft Material	1144 Stressproof Steel
Bearing Type	Deep Groove Ball Bearings
Standard Lubrication Method	Grease
Optional Lubrication Methods	Please Consult Factory
Grease Fitting	(1) Standard Zerk Fitting
Grease Capacity	Minimum 0.4 oz. Maximum 1.0 oz.
Grease Type (recommended for typical applications)	NLGI #2
Recommended Grease Base	Lithium
Standard Mounting Orientation	Shaft Horizontal - Consult Factory for other Mounting Orientations
Maximum Speed Without Modification	3100 RPM
Housing Material	Cast Iron
Housing Feet - Threaded Holes	(4) 3/8"-16 UNC x 0.68" deep
Housing Grease Ports	Press-fit Zerk Fitting
Unit Weight	10.0 lbs

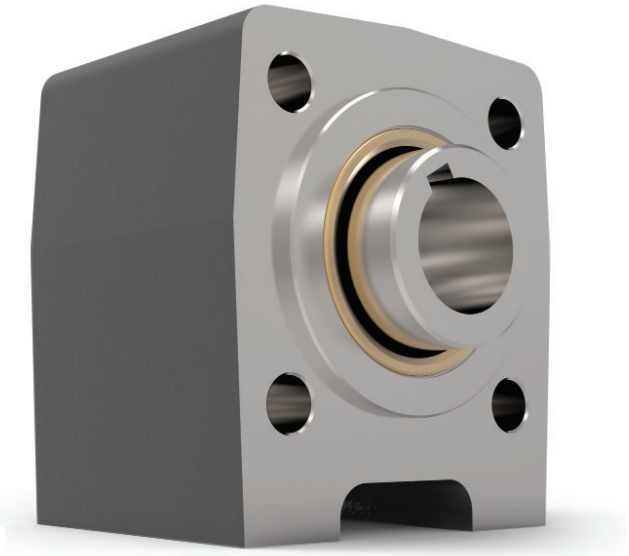

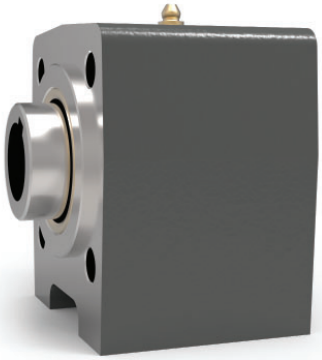

QHLA410F Series

DIMENSIONS

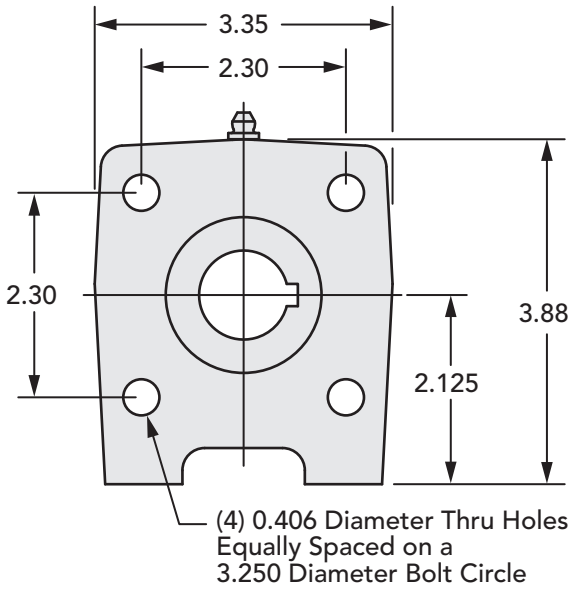

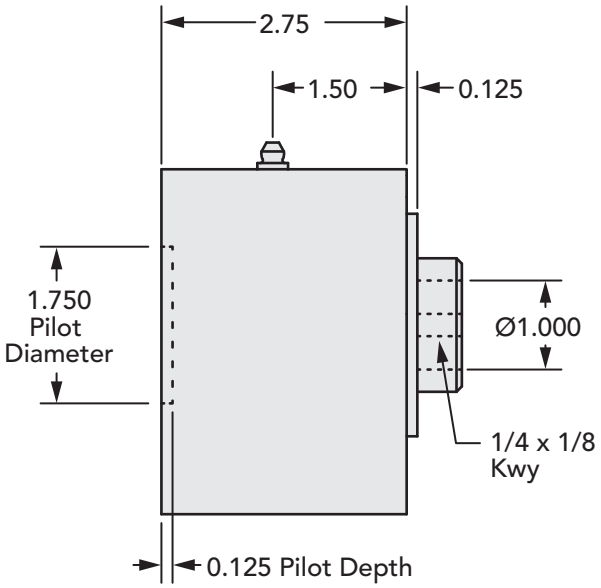

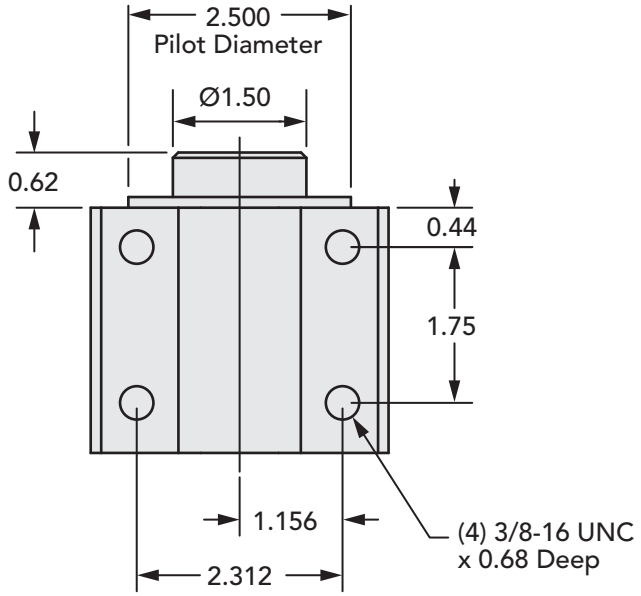

CODE

Part Number	Output Shaft - Keyway	Input Bore - Keyway
QHLA410F	1" bore - 1/4 x 1/8	1" - 1/4 x 1/8

QHLA415 Series

DESCRIPTION

Input Standard	Non-SAE 4-bolt mount (designed to fit a popular LSHT Geroler motor)
Input Pilot Diameter	1.750"
Input Pilot Depth	0.125"
Input Pilot Sealing Method	Fiber Gasket
Input Bore Diameter and Depth	1" keyed - bore depth is 2.18"
Output Shaft Diameter	1-1/2"
Output Shaft Keyway	3/8" x 3/16" keyway
Output Shaft Keyway Length	2.06"
Output Shaft Length	2.87"
Output Pilot Diameter	2.500"
Output Pilot Height	0.125"
Shaft Material	1144 Stressproof Steel
Bearing Type	Deep Groove Ball Bearings
Standard Lubrication Method	Grease
Optional Lubrication Methods	Please Consult Factory
Grease Fitting	(1) Standard Zerk Fitting
Grease Capacity	Minimum 0.4 oz. Maximum 1.0 oz.
Grease Type (recommended for typical applications)	NLGI #2
Recommended Grease Base	Lithium
Standard Mounting Orientation	Shaft Horizontal - Consult Factory for other Mounting Orientations
Maximum Speed Without Modification	3800 RPM
Housing Material	Cast Iron
Housing Feet - Threaded Holes	(4) 3/8"-16 UNC x 0.68" deep
Housing Grease Ports	Press-fit Zerk Fitting
Unit Weight	10.0 lbs

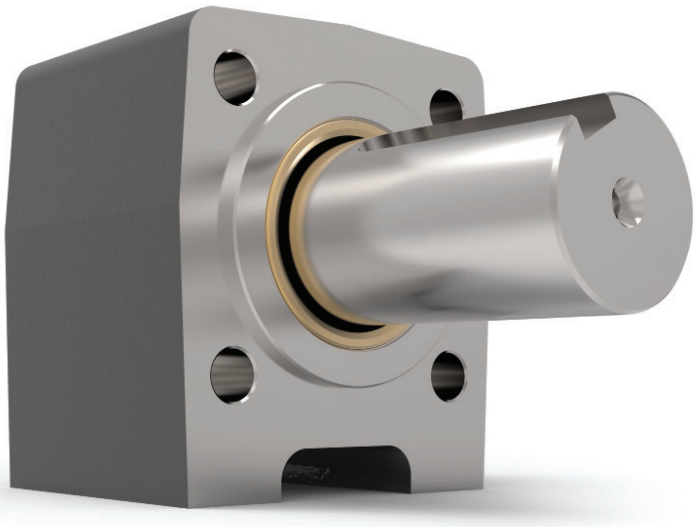

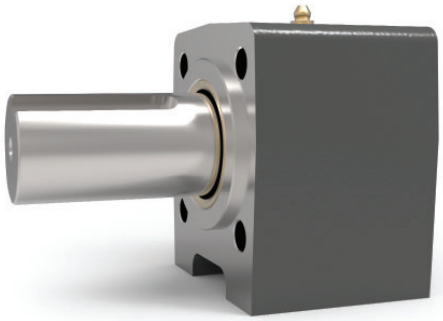

QHLA415 Series

DIMENSIONS

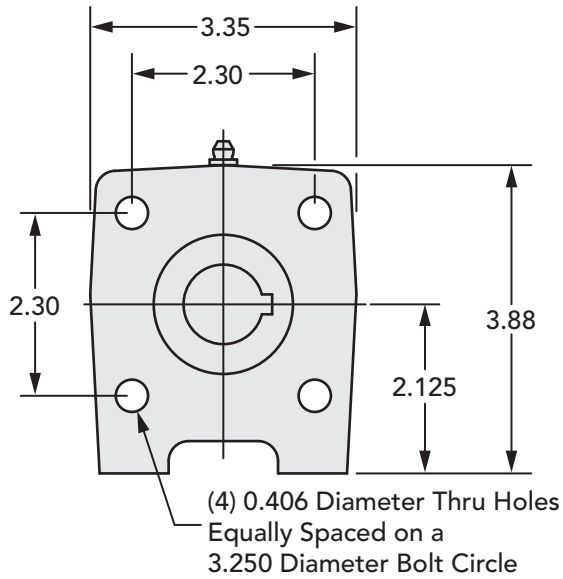

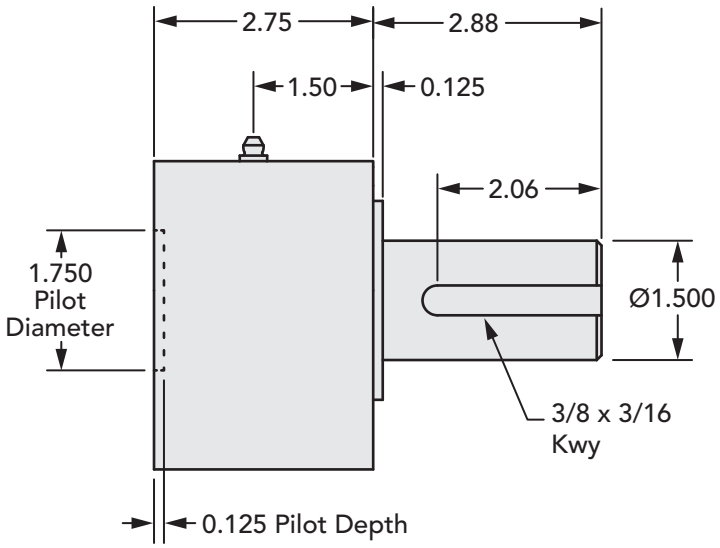

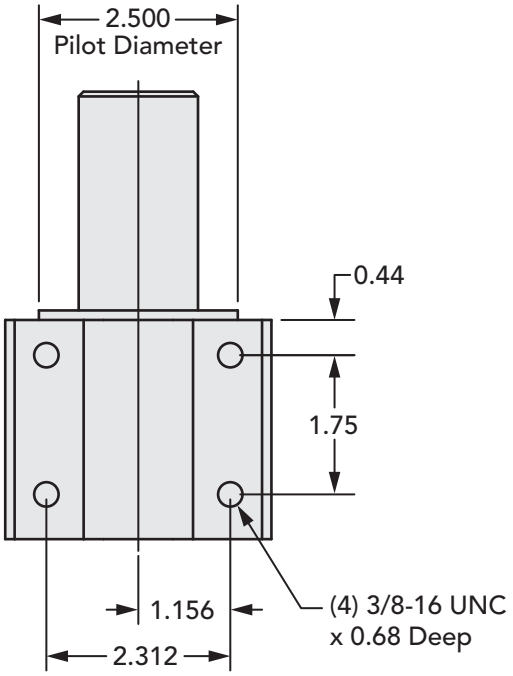

CODE

Part Number	Output Shaft - Keyway	Input Bore - Keyway
QHLA415	1-1/2" - 3/8 x 3/16	1" - 1/4 x 1/8

QHLA512 Series

DESCRIPTION

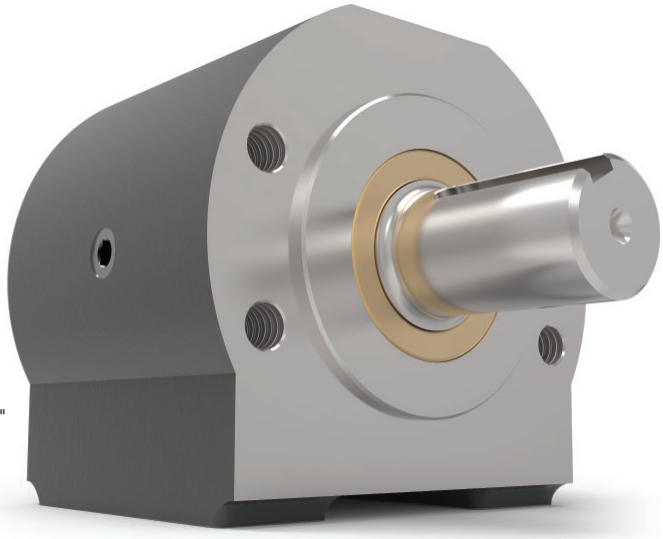

Input Standard	SAE A 2 bolt - 2 different mounts: 4-bolt Magneto Mount 2-bolt (rotated 22-1/2° from horizontal)
Input Pilot Diameter	3.250"
Input Pilot Depth	0.250"
Input Pilot Sealing Method	Fiber Gasket
Input Bore Diameter and Depth	1-1/4" keyed - bore depth is 2.5" 6B Spline - bore depth is 2.68" 14 tooth 12/24 spline - bore depth is 2.75"
Input Shaft Seal Type	Double-lip with Garter Spring
Output Shaft Diameter	1-1/4"
Output Shaft Keyway	5/16" x 5/32" keyway
Output Shaft Keyway Length	1.72"
Output Shaft Length	2.25"
Output Shaft Seal Type	Double-lip with Garter Spring
Output Pilot Diameter	3.250"
Output Pilot Height	0.125"
Shaft Material	1144 Stressproof Steel
Bearing Type	Tapered Roller Bearings
Standard Lubrication Method	Grease
Optional Lubrication Methods	Please Consult Factory
Grease Fitting	(1) Standard Zerk fitting
Grease Capacity	Minimum 2.0 oz. Maximum 4.0 oz.
Grease Type (recommended for typical applications)	NLGI #2
Recommended Grease Base	Lithium
Standard Mounting Orientation	Shaft Horizontal - Consult Factory for other Mounting Orientations
Maximum Speed Without Modification	2300 RPM
Housing Material	Cast Iron
Housing Feet - Threaded Holes	(4) 3/8"-16 UNC x 1.00" deep
Housing Grease Ports	1/4-18 NPT
Unit Weight	22 lbs

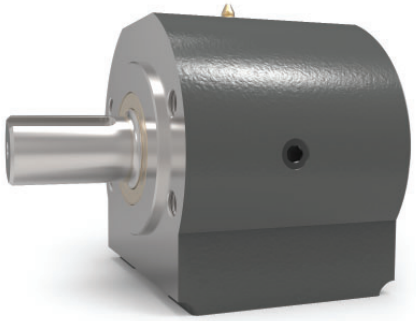

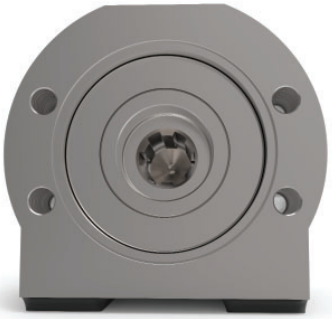

QHLA512 Series

DIMENSIONS

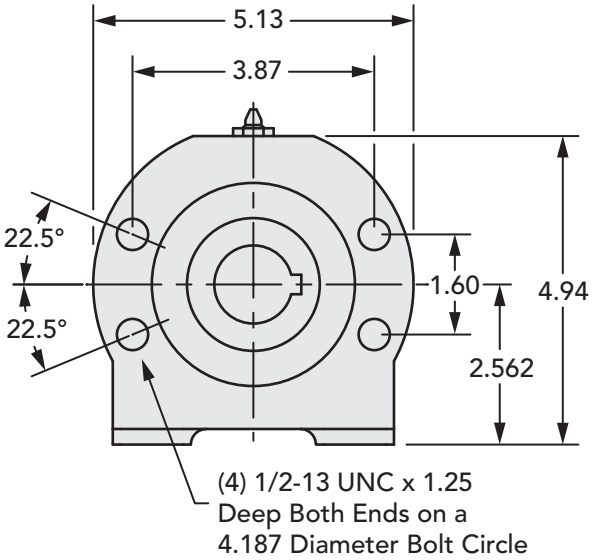

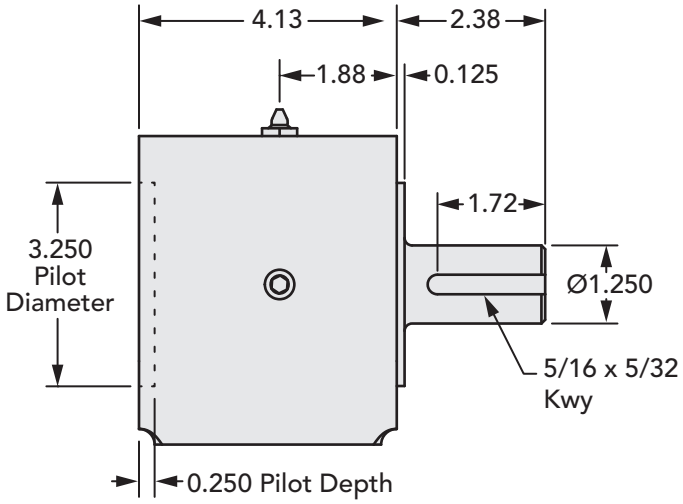

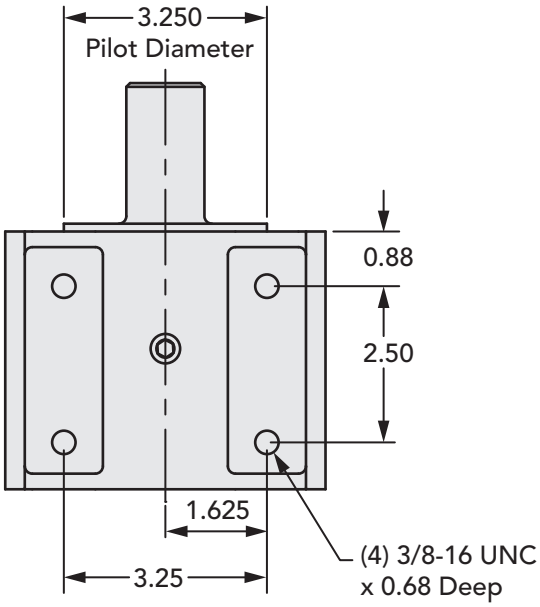

CODE

Part Number	Output Shaft - Keyway	Input Bore - Keyway
QHLA512-14S	1-1/4" - 5/16 x 5/32	14 Tooth 12/24 Spline
QHLA512-20	1-1/4" - 5/16 x 5/32	1-1/4" - 5/16 x 5/32
QHLA512-6BS	1-1/4" - 5/16 x 5/32	6BS Spline

QHLA515 Series

DESCRIPTION

Input Standard	SAE A 2 bolt - 2 different mounts: 4-bolt Magneto Mount 2-bolt (rotated 22-1/2° from horizontal)
Input Pilot Diameter	3.250"
Input Pilot Depth	0.250"
Input Pilot Sealing Method	Fiber Gasket
Input Bore Diameter and Depth	1-1/4" keyed - bore depth is 2.5" 6B Spline - bore depth is 2.68" 14 tooth 12/24 spline - bore depth is 2.75"
Input Shaft Seal Type	Double-lip with Garter Spring
Output Shaft Diameter	1-1/2"
Output Shaft Keyway	3/8" x 3/16" keyway
Output Shaft Keyway Length	1.69"
Output Shaft Length	2.25"
Output Shaft Seal Type	Double-lip with Garter Spring
Output Pilot Diameter	3.250"
Output Pilot Height	0.125"
Shaft Material	1144 Stressproof Steel
Bearing Type	Tapered Roller Bearings
Standard Lubrication Method	Grease
Optional Lubrication Methods	Please Consult Factory
Grease Fitting	(1) Standard Zerk Fitting
Grease Capacity	Minimum 2.0 oz. Maximum 4.0 oz.
Grease Type (recommended for typical applications)	NLGI #2
Recommended Grease Base	Lithium
Standard Mounting Orientation	Shaft Horizontal - Consult Factory for other Mounting Orientations
Maximum Speed Without Modification	2300 RPM
Housing Material	Cast Iron
Housing Feet - Threaded Holes	(4) 3/8"-16 UNC x 1.00" deep
Housing Grease Ports	1/4-18 NPT
Unit Weight	22 lbs

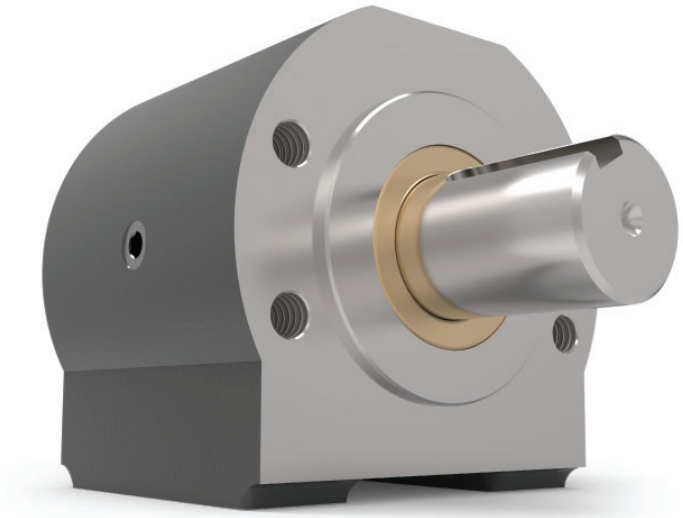

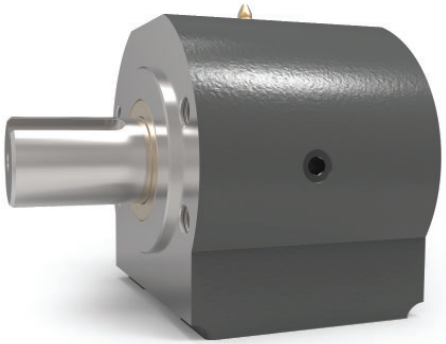

QHLA515 Series

DIMENSIONS

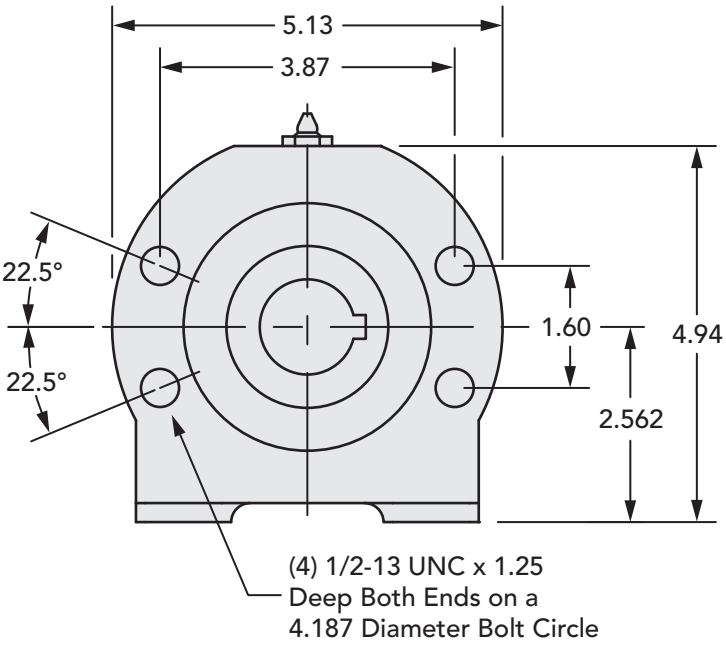

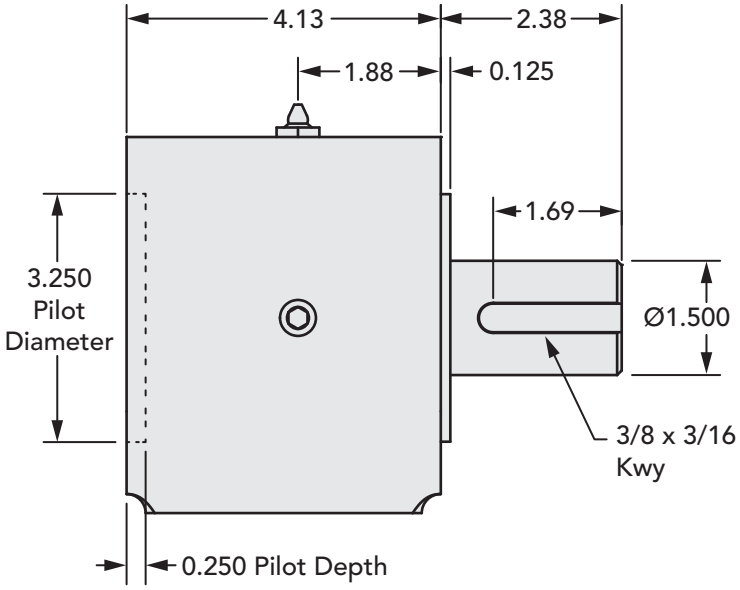

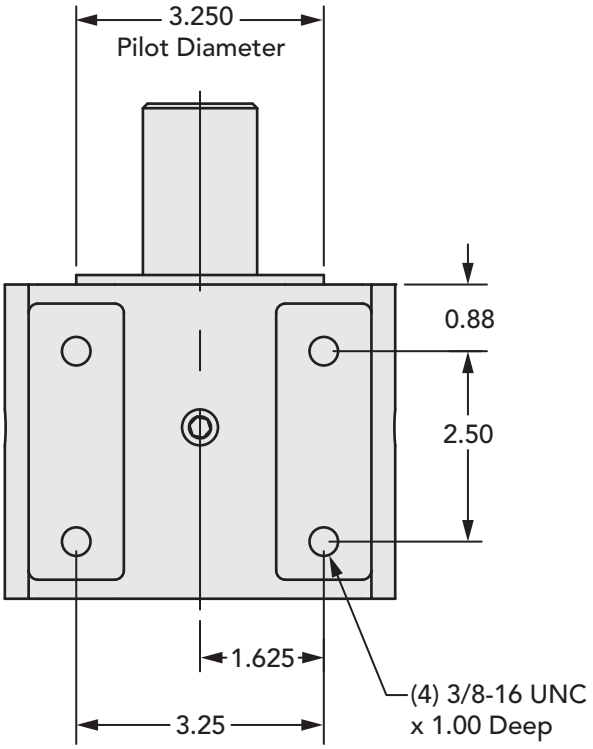

CODE

Part Number	Output Shaft - Keyway	Input Bore - Keyway
QHLA515-14S	1-1/2" - 3/8 x 3/16	14 Tooth 12/24 Spline
QHLA515-20	1-1/2" - 3/8 x 3/16	1-1/4" - 5/16 x 5/32
QHLA515-6BS	1-1/2" - 3/8 x 3/16	6BS Spline

QHLA600F Series

DESCRIPTION

Input Standard	SAE B 2- bolt or SAE B 4-bolt mount
Input Pilot Diameter	4.000"
Input Pilot Depth	0.500"
Input Pilot Sealing Method	Fiber Gasket
Input Bore Diameter and Depth	1" through-bore
Input Shaft Seal Type	Double-lip with Garter Spring
Output Shaft Diameter	1" through-bore
Output Shaft Keyway	1/4" x 1/8" keyway the entire length of the bore
Output Shaft Length	0.73" extension
Output Shaft Seal Type	Double-lip with Garter Spring
Output Pilot Diameter	4.000"
Output Pilot Height	0.500"
Shaft Material	1144 Stressproof Steel
Bearing Type	Tapered Roller Bearings
Standard Lubrication Method	Grease
Optional Lubrication Methods	Please Consult Factory
Grease Fitting	(1) Standard Zerk Fitting
Grease Capacity	Minimum 2.2 oz. Maximum 4.4 oz.
Grease Type (recommended for typical applications)	NLGI #2
Recommended Grease Base	Lithium
Standard Mounting Orientation	Shaft Horizontal - Consult Factory for other Mounting Orientations
Maximum Speed Without Modification	2300 RPM
Housing Material	Cast Iron
Housing Feet - Threaded Holes	(4) 7/16"-14 UNC x 0.75" deep
Housing Grease Ports	1/4-18 NPT
Unit Weight	30 lbs

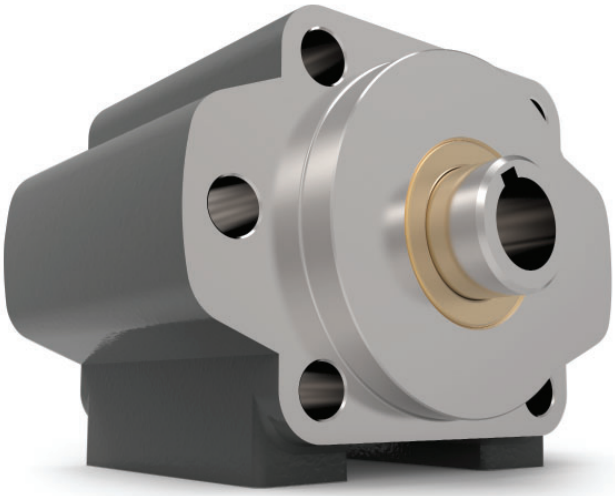

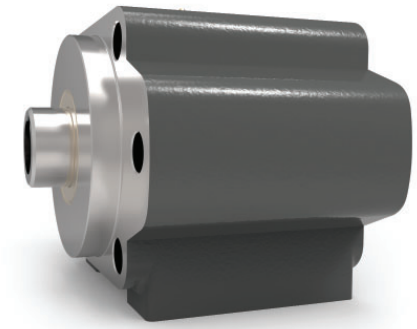

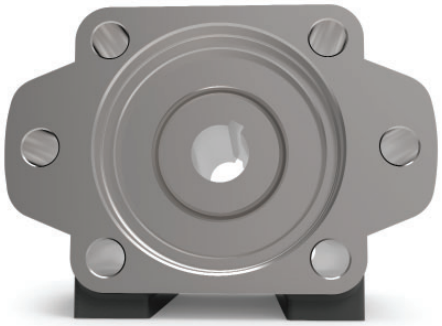

QHLA600F Series

DIMENSIONS

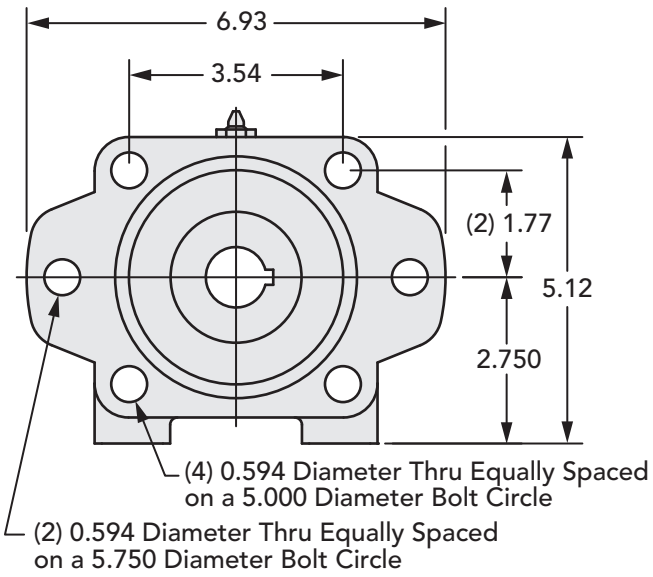

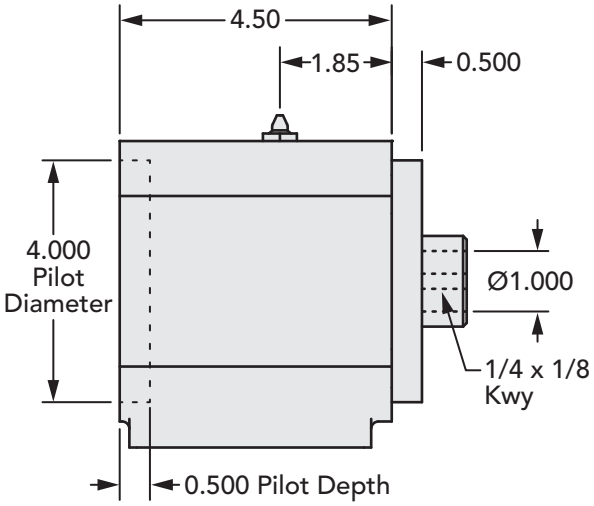

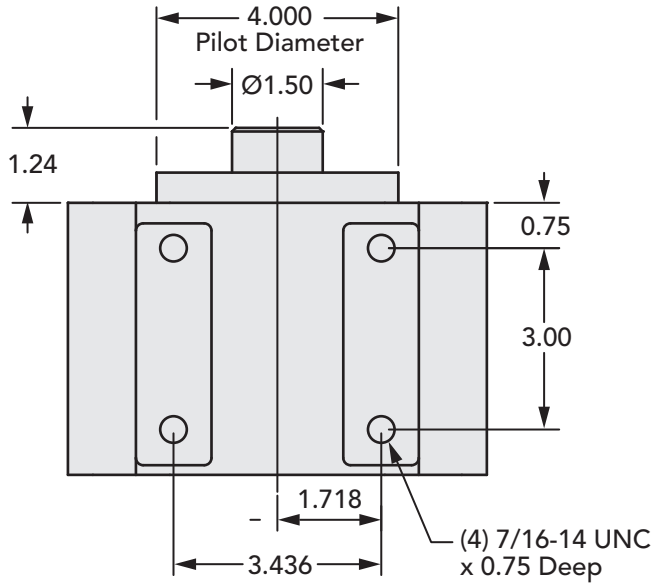

CODE

Part Number	Output Shaft - Keyway	Input Bore - Keyway
QHLA600F	1" bore - 1/4 x 1/8	1" - 1/4 x 1/8

QHLA615 Series

DESCRIPTION

Input Standard	SAE B 2-bolt or SAE B 4-bolt mount
Input Pilot Diameter	4.000"
Input Pilot Depth	0.500"
Input Pilot Sealing Method	Fiber Gasket
Input Bore Diameter and Depth	13 tooth 16/32 spline - bore depth is 2.67" 15 tooth 16/32 spine - bore depth is 2.67" 7/8" keyed shaft - bore depth is 2.85" 1" keyed shaft - bore depth is 2.85" 1-1/4" keyed shaft - bore depth is 2.86"
Input Shaft Seal Type	Double-lip with Garter Spring
Output Shaft Diameter	1-1/2"
Output Shaft Keyway	3/8" x 3/16" keyway
Output Shaft Keyway Length	1.69"
Output Shaft Length	2.00"
Output Shaft Seal Type	Double-lip with Garter Spring
Output Pilot Diameter	4.000"
Output Pilot Height	0.500"
Shaft Material	1144 Stressproof Steel
Bearing Type	Tapered Roller Bearings
Standard Lubrication Method	Grease
Optional Lubrication Methods	Please Consult Factory
Grease Fitting	(1) Standard Zerk Fitting
Grease Capacity	Minimum 2.2 oz. Maximum 4.4 oz.
Grease Type (recommended for typical applications)	NLGI #2
Recommended Grease base	Lithium
Standard mounting orientation	Shaft Horizontal - Consult Factory for other Mounting Orientations
Maximum Speed Without Modification	2300 RPM
Housing Material	Cast Iron
Housing Feet - Threaded Holes	(4) 7/16"-14 UNC x 0.75" deep
Housing Grease Ports	1/4-18 NPT
Unit Weight	30 lbs

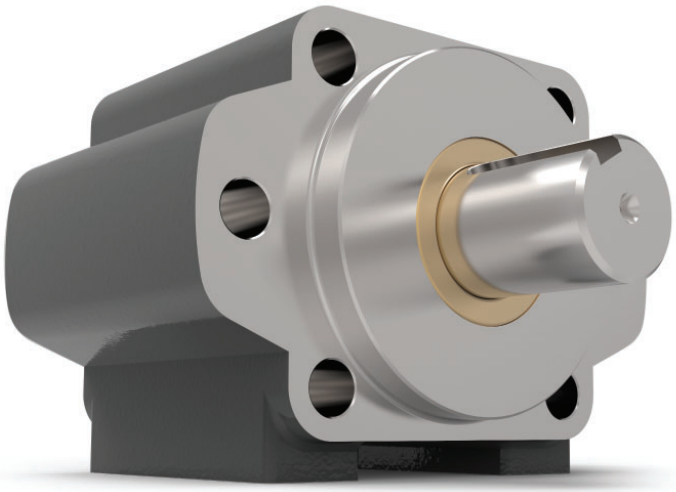

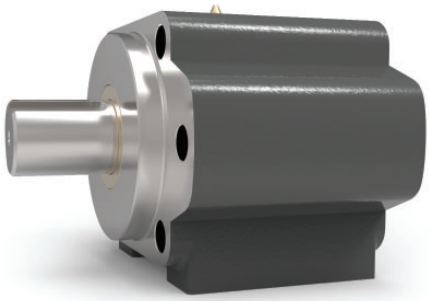

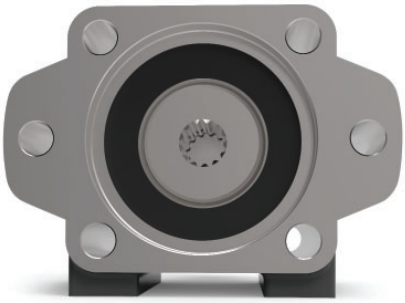

QHLA615 Series

DIMENSIONS

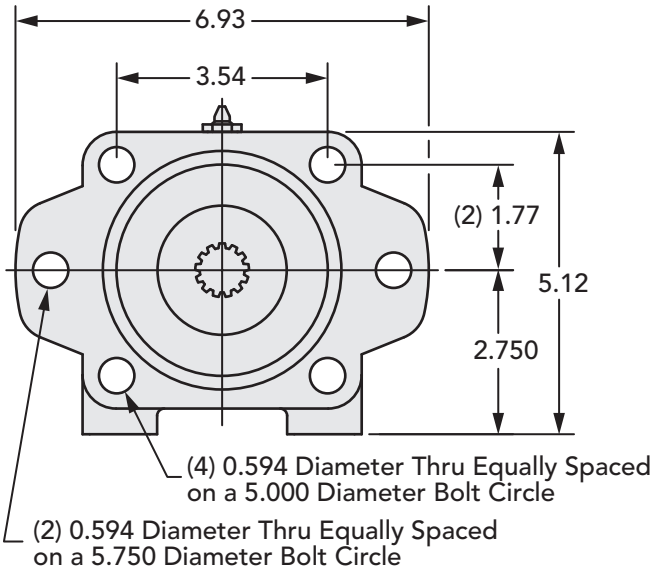

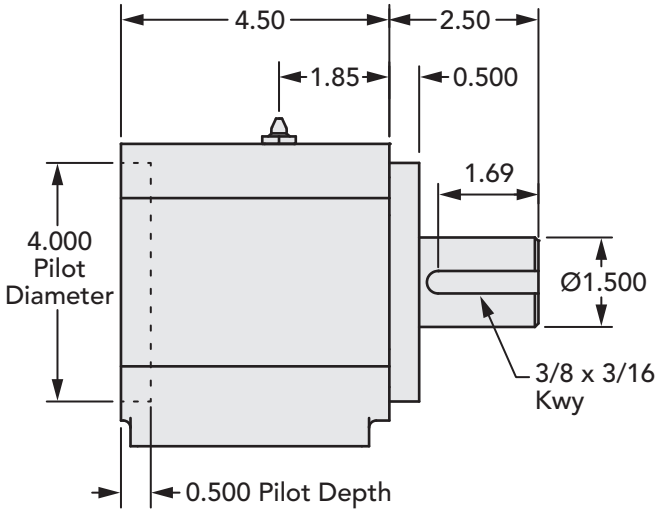

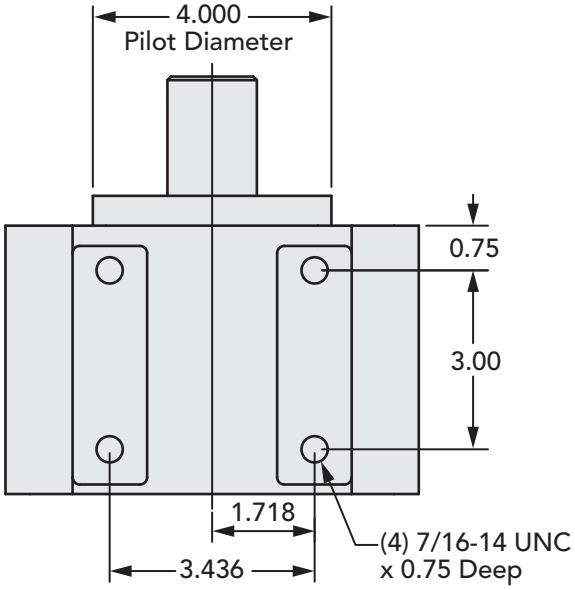

Part Number	Output Shaft - Keyway	Input Bore - Keyway
QHLA615-13S	1-1/2" - 3/8 x 3/16	13 Tooth 16/32 Spline
QHLA615-15S	1-1/2" - 3/8 x 3/16	15 Tooth 16/32 Spline
QHLA615-14K	1-1/2" - 3/8 x 3/16	7/8" - 3/16 x 3/32
QHLA615-14	1-1/2" - 3/8 x 3/16	7/8" - 1/4 x 1/8
QHLA615-16K	1-1/2" - 3/8 x 3/16	1" - 5/16 x 5/32
QHLA615-16	1-1/2" - 3/8 x 3/16	1" - 1/4 x 1/8
QHLA615-20	1-1/2" - 3/8 x 3/16	1-1/4" - 5/16 x 5/32

QHLA650 Series

DESCRIPTION

Input Standard	SAE B 2-bolt or SAE B 4-bolt mount
Input Pilot Diameter	4.000"
Input Pilot Depth	0.500"
Input Pilot Sealing Method	O-ring
Input Bore Diameter and Depth	13 tooth 16/32 Spline - bore depth is 2.43 inches 15 tooth 16/32 Spline - bore depth is 2.43 inches
Output Shaft Diameter	1-1/2"
Output Shaft Keyway	3/8" x 3/16" keyway
Output Shaft Keyway Length	2.81"
Output Shaft Length	3.50"
Output Shaft Seal Type	Double-lip with Garter Spring
Output Pilot Diameter	4.000"
Output Pilot Height	0.375"
Shaft Material	8620 steel - Heat-treated
Bearing Type	Spherical Roller Bearing
Standard Lubrication Method	Grease
Optional Lubrication Methods	Please Consult Factory
Grease Fittings	(2) Standard Zerk Fitting
Grease Capacity	Minimum 3.5 oz. Maximum 7.0 oz.
Grease Type (recommended for typical applications)	NLGI #2
Recommended Grease Base	Lithium
Standard Mounting Orientation	Shaft Horizontal - Consult Factory for other Mounting Orientations
Maximum Speed Without Modification	3500 RPM
Housing Material	Cast Iron
Housing Feet - Threaded Holes	(4) 7/16"-14 UNC x 0.75" deep
Housing Grease Ports	(2) 1/4-18 NPT
Unit Weight	39.7 lbs

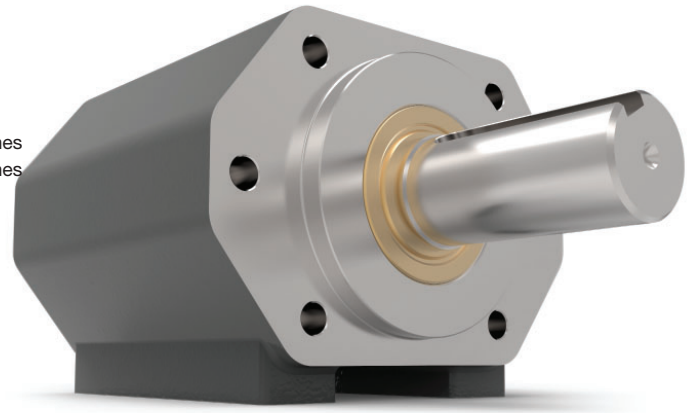

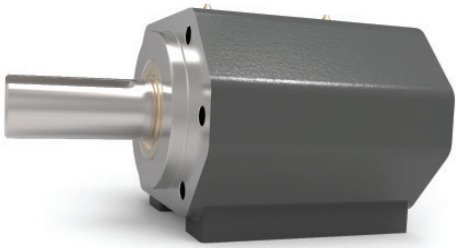

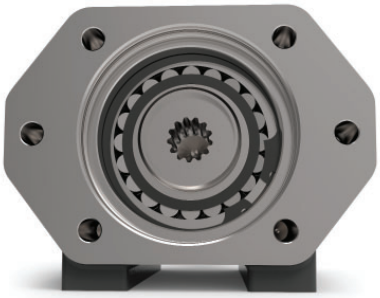

QHLA650 Series

DIMENSIONS

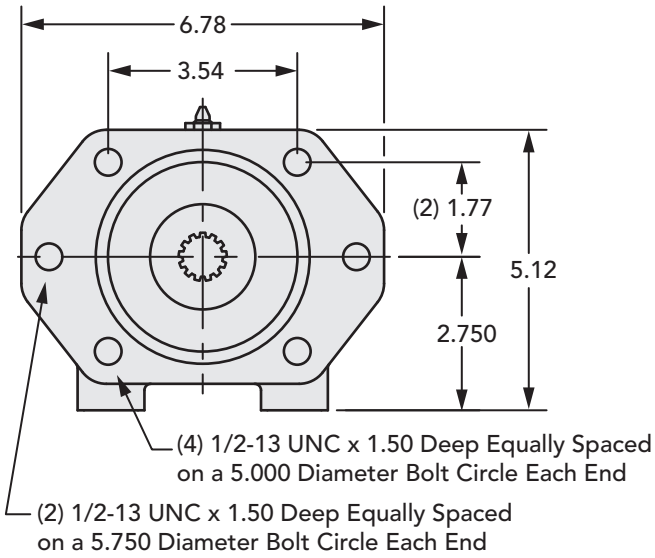

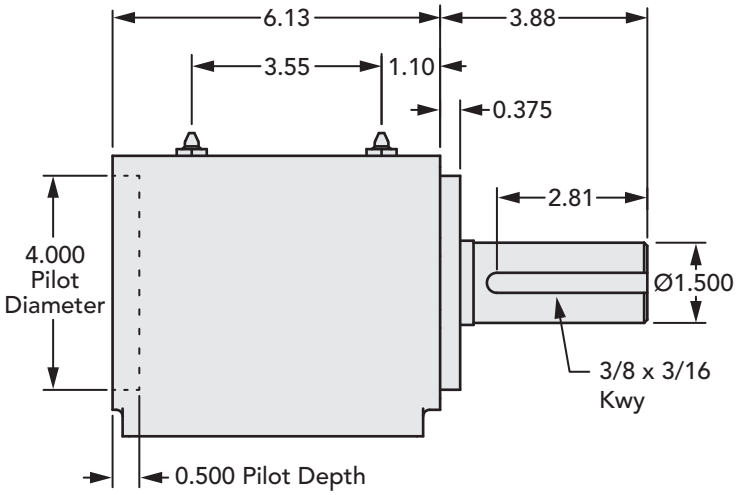

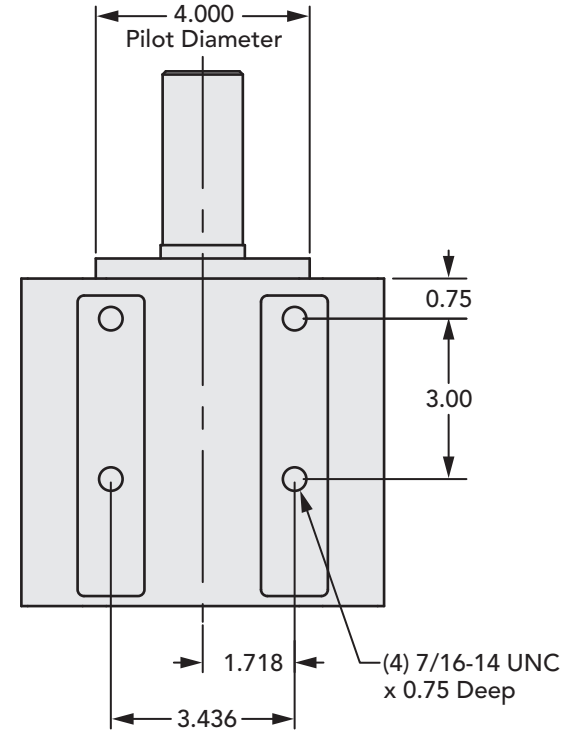

CODE

Part Number	Output Shaft - Keyway	Input Bore - Keyway
QHLA650-13S	1-1/2" - 3/8 x 3/16	13 Tooth 16/32 Spline
QHLA650-15S	1-1/2" - 3/8 x 3/16	15 Tooth 16/32 Spline

QHLA815 Series

DESCRIPTION

Input Standard	SAE C 2-bolt or SAE C 4-bolt mount
Input Pilot Diameter	5.000"
Input Pilot Depth	0.500"
Input Pilot Sealing Method	Fiber Gasket
Input Bore Diameter and Depth	14 tooth 12/24 spline - bore depth is 2.89" 7/8" keyed shaft - bore depth is 3.33" 1" keyed shaft - bore depth is 3.33" 1-1/4 keyed shaft - bore depth is 3.33"
Input Shaft Seal Type	Double-lip with Garter Spring
Output Shaft Diameter	1-1/2"
Output Shaft Keyway	3/8" x 3/16" keyway
Output Shaft Keyway Length	2.68"
Output Shaft Length	3.00"
Output Shaft Seal Type	Double-lip with Garter Spring
Output Pilot Diameter	5.000"
Output Pilot Height	0.500"
Shaft Material	1144 Stressproof Steel
Bearing Type	Tapered Roller Bearings
Standard Lubrication Method	Grease
Optional Lubrication Methods	Please Consult Factory
Grease Fitting	(1) Standard Zerk Fitting
Grease Capacity	Minimum 2.8 oz. Maximum 5.6 oz.
Grease Type (recommended for typical applications)	NLGI #2
Recommended Grease Base	Lithium
Standard Mounting Orientation	Shaft Horizontal - Consult Factory for other Mounting Orientations
Maximum Speed Without Modification	2300 RPM
Housing Material	Cast Iron
Housing Feet - Threaded Holes	(4) 1/2"-13 UNC x 1.00" deep
Housing Grease Ports	1/4-18 NPT
Unit Weight	55 lbs

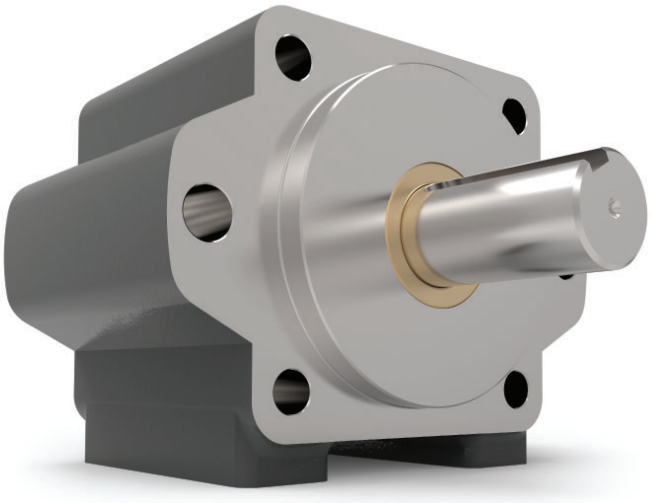

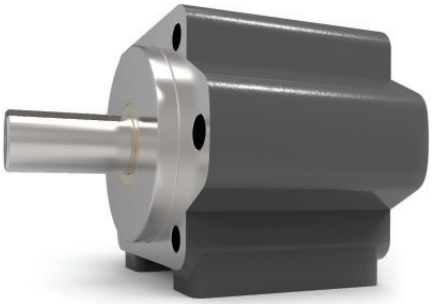

QHLA815 Series

DIMENSIONS

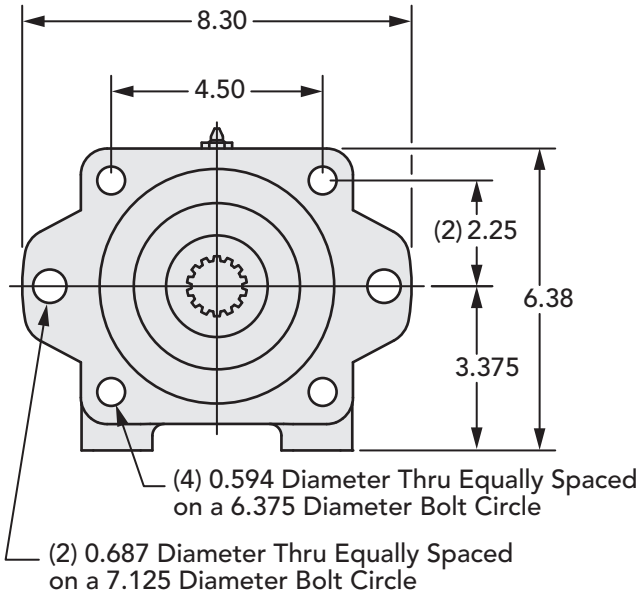

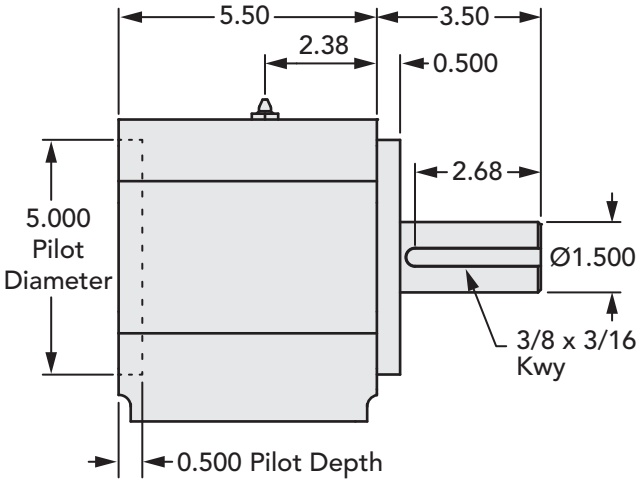

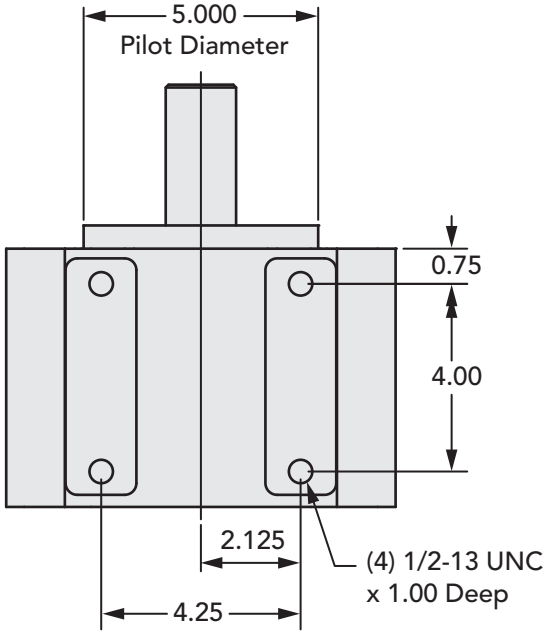

CODE

Part Number	Output Shaft - Keyway	Input Bore - Keyway
QHLA815-14S	1-1/2" - 3/8 x 3/16	14 Tooth 12/24 Spline
QHLA815-14K	1-1/2" - 3/8 x 3/16	7/8" - 3/16 x 3/32
QHLA815-14	1-1/2" - 3/8 x 3/16	7/8" - 1/4 x 1/8
QHLA815-16K	1-1/2" - 3/8 x 3/16	1" - 5/16 x 5/32
QHLA815-16	1-1/2" - 3/8 x 3/16	1" - 1/4 x 1/8
QHLA815-20	1-1/2" - 3/8 x 3/16	1-1/4" - 5/16 x 5/32

QHLA915 Series

DESCRIPTION

Input Standard	SAE C 2-bolt or SAE C 4-bolt mount
Input Pilot Diameter	5.000"
Input Pilot Depth	0.500"
Input Pilot Sealing Method	Fiber Gasket
Input Bore Diameter and Depth	14 tooth 12/24 spline - bore depth is 3.09" 17 tooth 12/24 spline - bore depth is 3.50" 1-1/2 - 3/8 x 3/16 keyed shaft - bore depth is 3.59" 1-3/4 - 7/16 x 7/32 keyed shaft - bore depth is 3.59"
Input Shaft Seal Type	Double-lip with Garter Spring
Output Shaft Diameter	1-1/2"
Output Shaft Keyway	3/8" x 3/16" keyway
Output Shaft Keyway Length	2.56"
Output Shaft Length	3.00"
Output Shaft Seal Type	Double-lip with Garter Spring
Output Pilot Diameter	5.000"/4.997"
Output Pilot Height	0.500"
Shaft Material	1144 Stressproof Steel
Bearing Type	Tapered Roller Bearings
Standard Lubrication Method	Grease
Optional Lubrication Methods	Please Consult Factory
Grease Fitting	(1) Standard Zerk Fitting
Grease Capacity	Minimum 4.3 oz. Maximum 8.6 oz.
Grease Type (recommended for typical applications)	NLGI #2
Recommended Grease Base	Lithium
Standard Mounting Orientation	Shaft Horizontal - Consult Factory for other Mounting Orientations
Maximum Speed Without Modification	1900 RPM
Housing Material	Cast Iron
Housing Feet - Threaded Holes	(4) 1/2"-13 UNC x 1.00" deep
Housing Grease Ports	1/4-18 NPT
Unit Weight	55 lbs

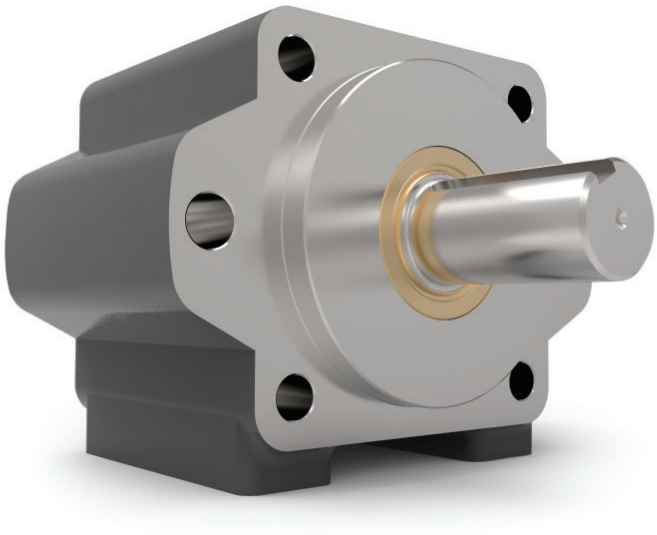

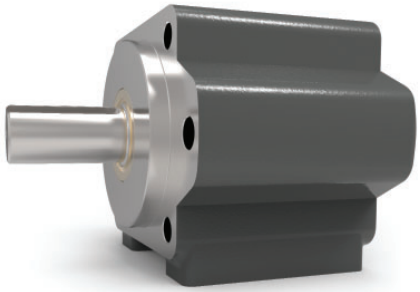

QHLA915 Series

DIMENSIONS

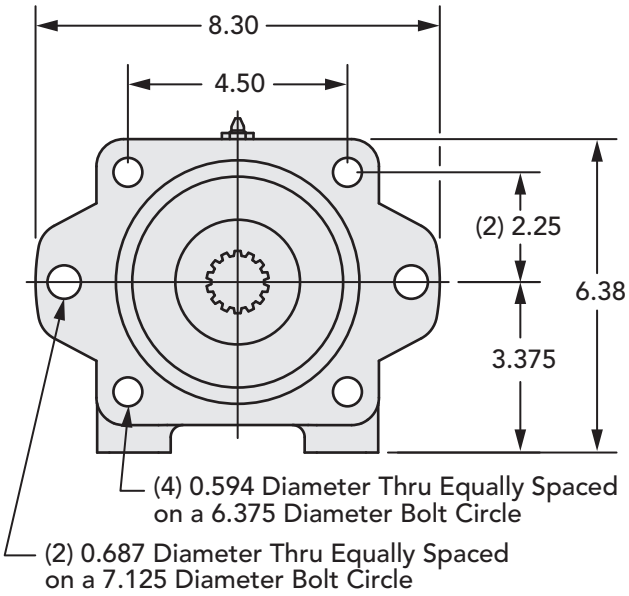

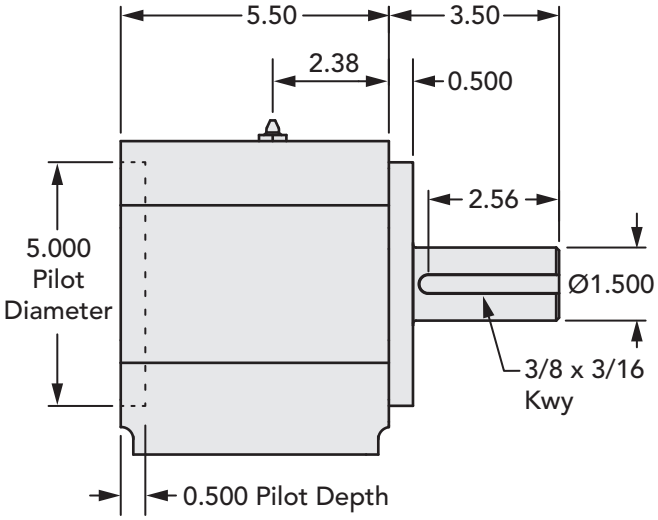

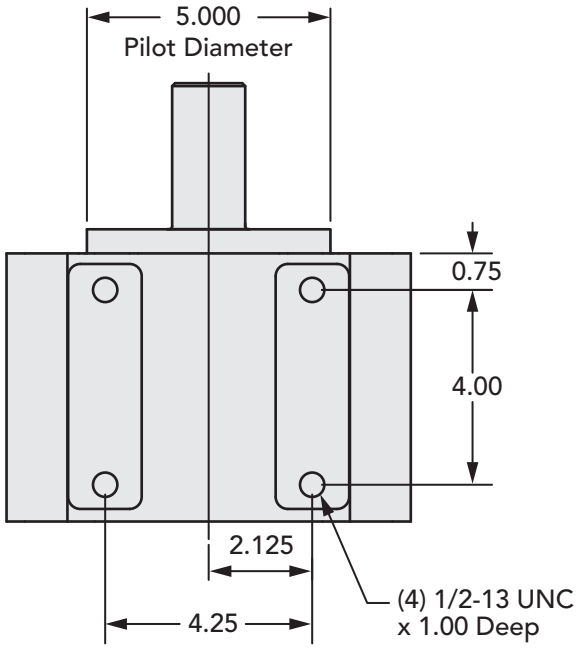

CODE

Part Number	Output Shaft - Keyway	Input Bore - Keyway
QHLA915-14S	1-1/2" - 3/8 x 3/16	14 Tooth 12/24 Spline
QHLA915-17S	1-1/2" - 3/8 x 3/16	17 Tooth 12/24 Spline
QHLA915-24	1-1/2" - 3/8 x 3/16	1-1/2" - 3/8 x 3/16
QHLA915-28	1-1/2" - 3/8 x 3/16	1-3/4" - 7/16 x 7/32

QHLA928 Series

DESCRIPTION

Input Standard	SAE C 2-bolt or SAE C 4-bolt mount
Input Pilot Diameter	5.000"
Input Pilot Depth	0.500"
Input Pilot Sealing Method	Fiber Gasket
Input Bore Diameter and Depth	14 tooth 12/24 spline - bore depth is 3.09" 17 tooth 12/24 spline - bore depth is 3.50" 1-1/2 - 3/8 x 3/16 keyed shaft - bore depth is 3.59" 1-3/4 - 7/16 x 7/32 keyed shaft - bore depth is 3.59"
Input Shaft Seal Type	Double-lip with Garter Spring
Output Shaft Diameter	1-3/4"
Output Shaft Keyway	7/16" x 7/32" keyway
Output Shaft Keyway Length	2.53"
Output Shaft Length	3.00"
Output Shaft Seal Type	Double-lip with Garter Spring
Output Pilot Diameter	5.000"
Output Pilot Height	0.500"
Shaft Material	1144 Stressproof Steel
Bearing Type	Tapered Roller Bearings
Standard Lubrication Method	Grease
Optional Lubrication Methods	Please Consult Factory
Grease Fitting	(1) Standard Zerk Fitting
Grease Capacity	Minimum 4.3 oz. Maximum 8.6 oz.
Grease Type (recommended for typical applications)	NLGI #2
Recommended Grease Base	Lithium
Standard Mounting Orientation	Shaft Horizontal - Consult Factory for other Mounting Orientations
Maximum Speed Without Modification	1900 RPM
Housing Material	Cast Iron
Housing Feet - Threaded Holes	(4) 1/2"-13 UNC x 1.00" deep
Housing Grease Ports	1/4-18 NPT
Unit Weight	55 lbs

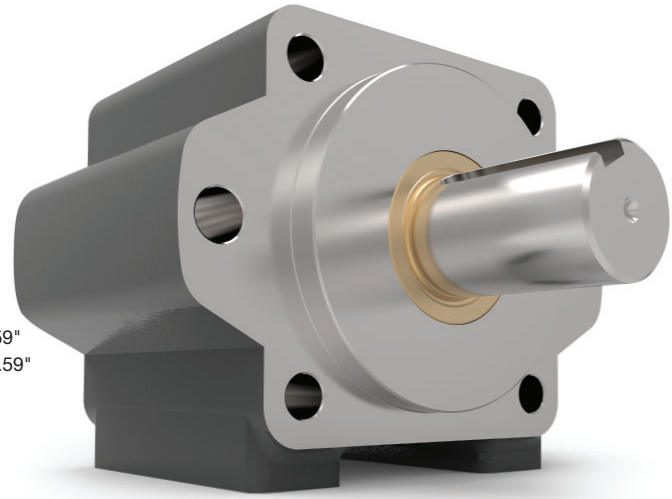

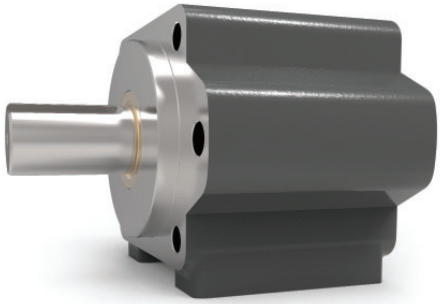

QHLA928 Series

DIMENSIONS

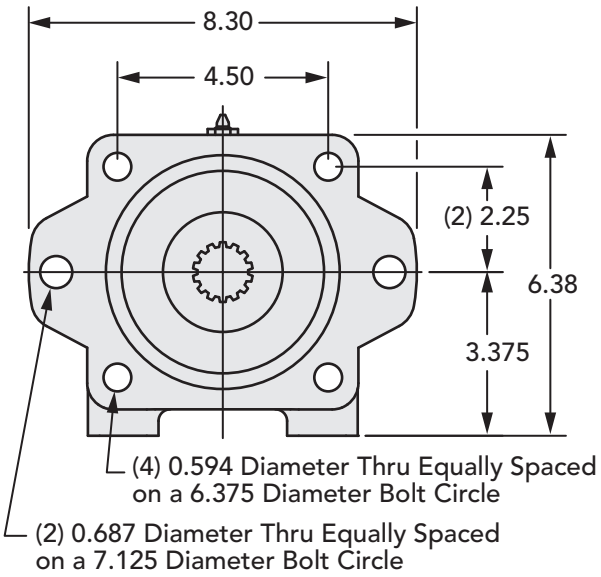

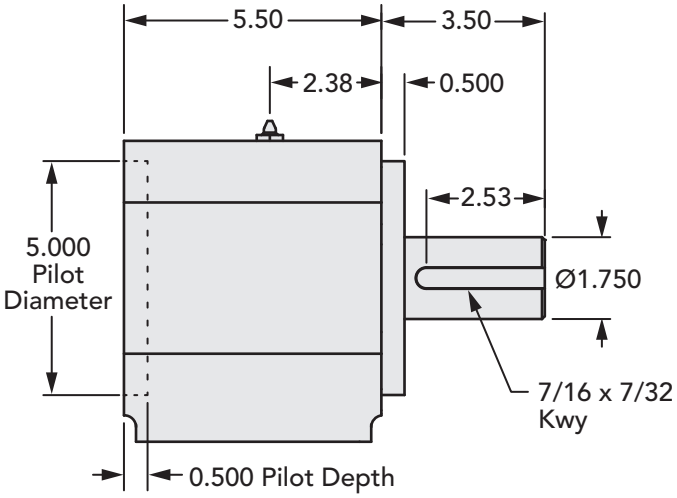

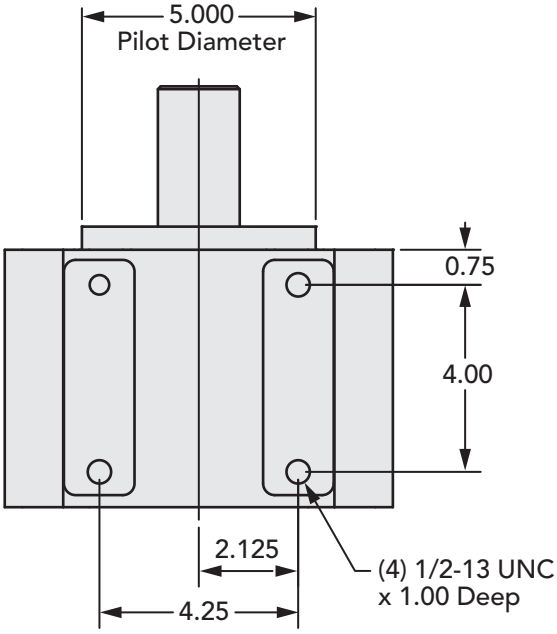

CODE

Part Number	Output Shaft - Keyway	Input Bore - Keyway
QHLA928-14S	1-3/4" - 7/16 x 7/32	14 Tooth 12/24 Spline
QHLA928-17S	1-3/4" - 7/16 x 7/32	17 Tooth 12/24 Spline
QHLA928-24	1-3/4" - 7/16 x 7/32	1-1/2" - 3/8 x 3/16
QHLA928-28	1-3/4" - 7/16 x 7/32	1-3/4" - 7/16 x 7/32

QHLA1136 Series

DESCRIPTION

Input Standard	SAE D 2-bolt or SAE D 4-bolt mount
Input Pilot Diameter	6.000"
Input Pilot Depth	0.500"
Input Pilot Sealing Method	Fiber Gasket
Input Bore Diameter and Depth	13 tooth 8/16 spline - bore depth is 3.92" 1-3/4 - 7/16 x 7/32 keyed shaft - bore depth is 3.80"
Input Shaft Seal Type	Double-lip with Garter Spring
Output Shaft Diameter	2-1/4"
Output Shaft Keyway	1/2" x 1/4" keyway
Output Shaft Keyway Length	4.00"
Output Shaft Length	5.00"
Output Shaft Seal Type	Double-lip with Garter Spring
Output Pilot Diameter	6.000"
Output Pilot Height	0.500"
Shaft Material	1144 Stressproof Steel
Bearing Type	Tapered Roller Bearings
Standard Lubrication Method	Grease
Optional Lubrication Methods	Please Consult Factory
Grease Fitting	(2) Standard Zerk Fitting
Grease Capacity	Minimum 20 oz. (10 oz. per grease fitting) Maximum 30 oz. (15 oz. per grease fitting)
Grease Type (recommended for typical applications)	NLGI #2
Recommended Grease Base	Lithium
Standard Mounting Orientation	Shaft Horizontal - Consult Factory for other Mounting Orientations
Maximum Speed Without Modification	2500 RPM
Housing Material	Cast Iron
Housing Feet - Threaded Holes	(4) 3/4"-10 UNC x 1.50" deep
Housing Grease Ports	1/4-18 NPT
Unit Weight	195 lbs

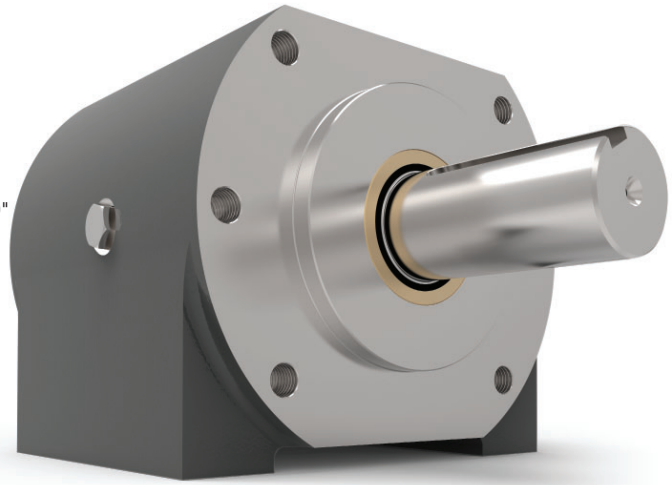

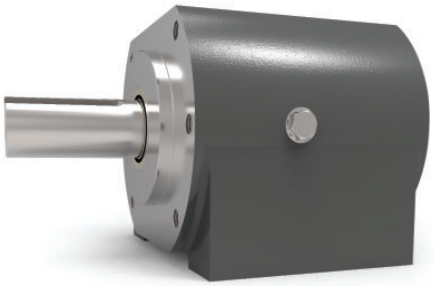

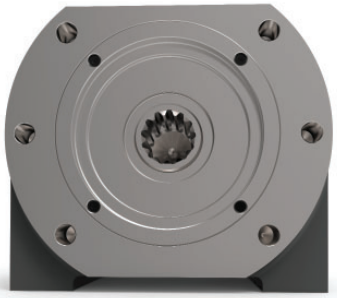

QHLA1136 Series

DIMENSIONS

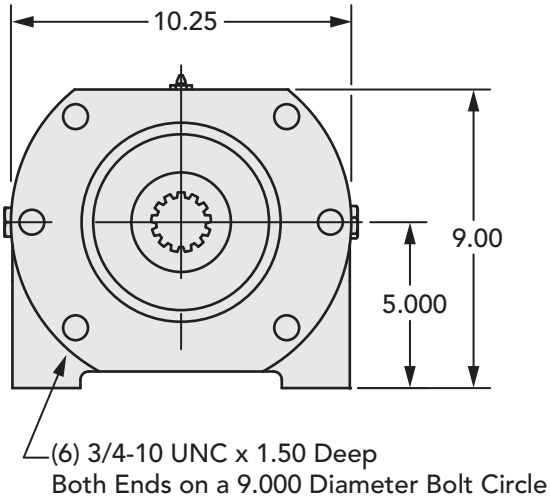

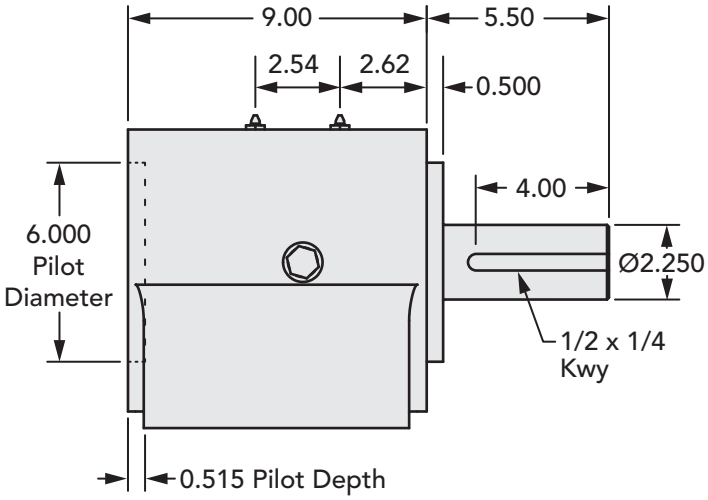

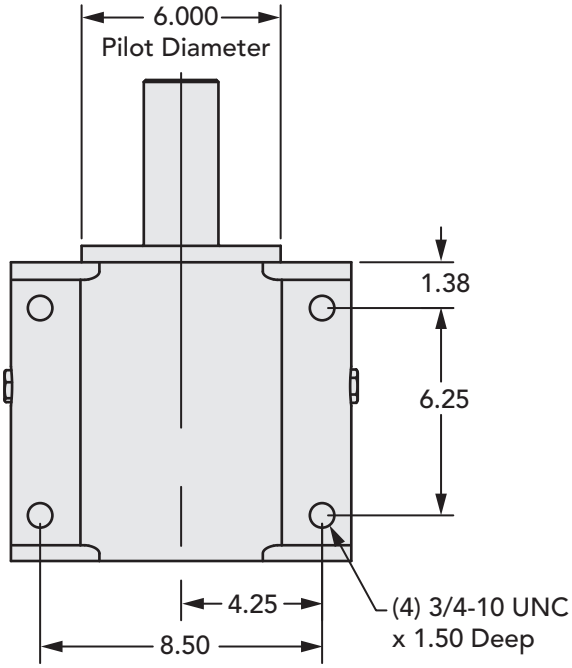

CODE

Part Number	Output Shaft - Keyway	Input Bore - Keyway
QHLA1136-13S	2-1/4" - 1/2 x 1/4	13 Tooth 8/16 Spline
QHLA1136-28	2-1/4" - 1/2 x 1/4	1-3/4" - 7/16 x 7/32

QHLA1250 Series

DESCRIPTION

Input Standard	SAE E 4-bolt mount
Input Pilot Diameter	6.500"
Input Pilot Depth	0.625"
Input Pilot Sealing Method	Fiber Gasket
Input Bore Diameter and Depth	13 tooth 8/16 spline - bore depth is 3.73"
Input Shaft Seal Type	Double-lip with Garter Spring
Output Shaft Diameter	3-1/2"
Output Shaft Keyway	7/8" x 7/16" keyway
Output Shaft Keyway Length	4.13"
Output Shaft Length	5.00"
Output Shaft Seal Type	Double-lip with Garter Spring
Output Pilot Diameter	6.500"
Output Pilot Height	0.500"
Shaft Material	1144 Stressproof Steel
Bearing Type	Spherical Roller Bearings
Standard Lubrication Method	Grease
Optional Lubrication Methods	Please Consult Factory
Grease Fitting	Optional
Grease Capacity	Minimum 11 oz. Maximum 22 oz.
Grease Type (recommended for typical applications)	NLGI #2
Recommended Grease Base	Lithium
Standard Mounting Orientation	Shaft Horizontal - Consult Factory for other Mounting Orientations
Maximum Speed Without Modification	1500 RPM
Housing Material	Cast Iron
Housing Feet - Threaded Holes	(4) 1"-8 UNC x 2.00" deep
Housing Grease Ports	(3) 1/2-13 UNC X 1.25 deep
Unit Weight	250 lbs

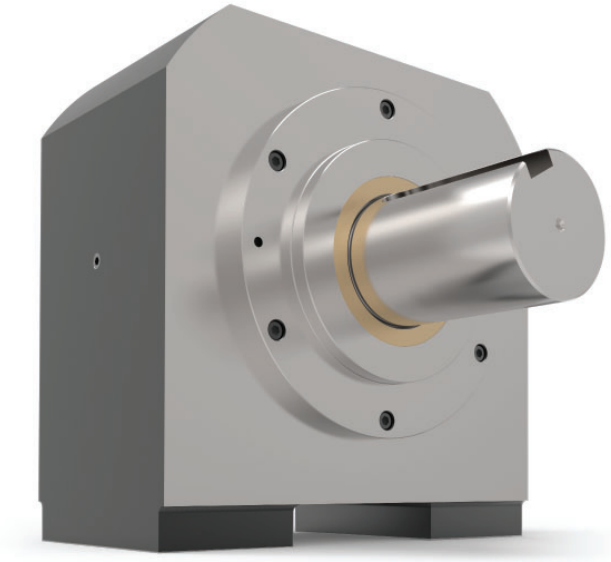

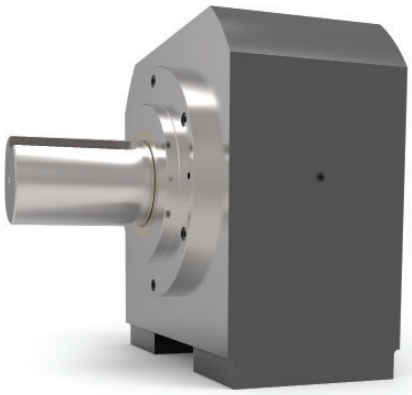

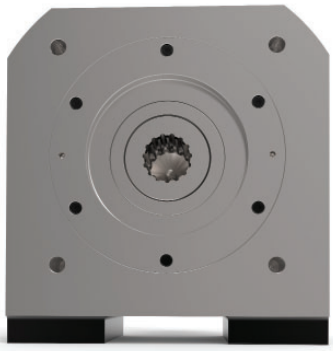

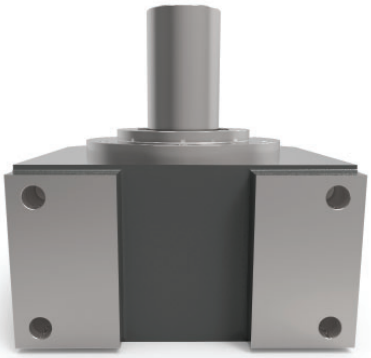

QHLA1250 Series

DIMENSIONS

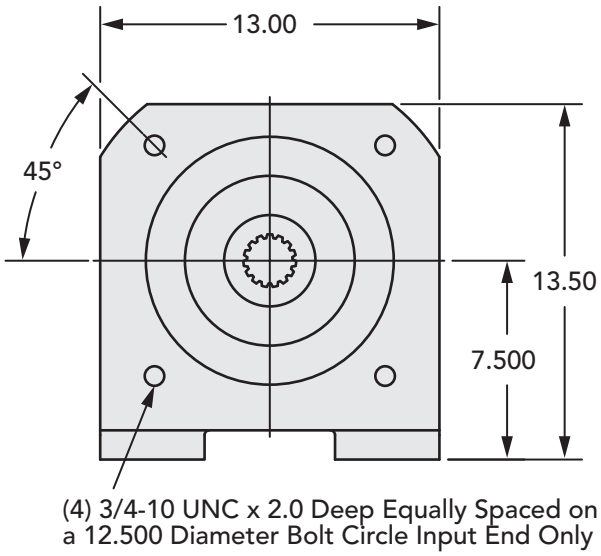

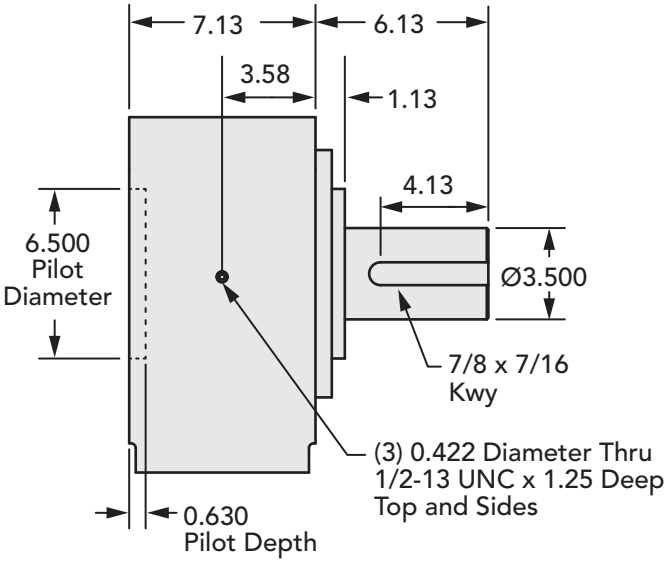

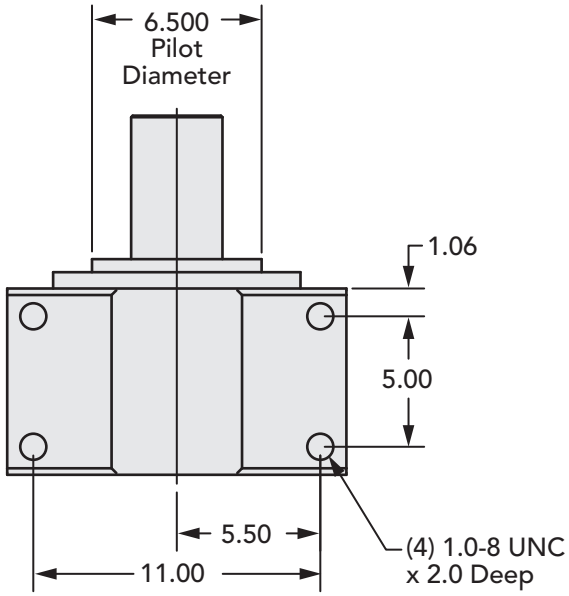

CODE

Part Number	Output Shaft - Keyway	Input Bore - Keyway
QHLA1250-13S	2-1/2" - 5/8 x 5/16	13 Tooth 8/16 Spline

QHLA1500 Series

DESCRIPTION

Input Standard	SAE F 4-bolt mount
Input Pilot Diameter	7.000"
Input Pilot Depth	0.625"
Input Pilot Sealing Method	Fiber Gasket
Input Bore Diameter and Depth	15 tooth 8/16 spline - bore depth is 3.37"
Input Pilot Diameter	7.000"
Input Pilot Depth	0.625"
Input Shaft Seal Type	Double-lip with Garter Spring
Output Shaft Diameter	3-1/2"
Output Shaft Keyway	7/8" x 7/16" keyway
Output Shaft Keyway Length	4.13"
Output Shaft Length	5.00"
Output Shaft Seal Type	Double-lip with Garter Spring
Output Pilot Diameter	7.000"
Output Pilot Height	0.500"
Shaft Material	1144 Stressproof Steel
Bearing Type	Spherical Roller Bearings
Standard Lubrication Method	Grease
Optional Lubrication Methods	Please Consult Factory
Grease Fitting	Optional
Grease Capacity	Minimum 11 oz. Maximum 22 oz.
Grease type (recommended f or typical applications)	NLGI #2
Recommended Grease Base	Lithium
Standard Mounting Orientation	Shaft Horizontal - Consult Factory for other Mounting Orientations
Maximum Speed Without Modification	1500 RPM
Housing Material	Cast Iron
Housing Feet - Threaded Holes	(4) 1"-8 UNC x 2.00" deep
Housing Grease Ports	(3) 1/2-13 UNC X 1.25 deepDP
Unit Weight	250 lbs.

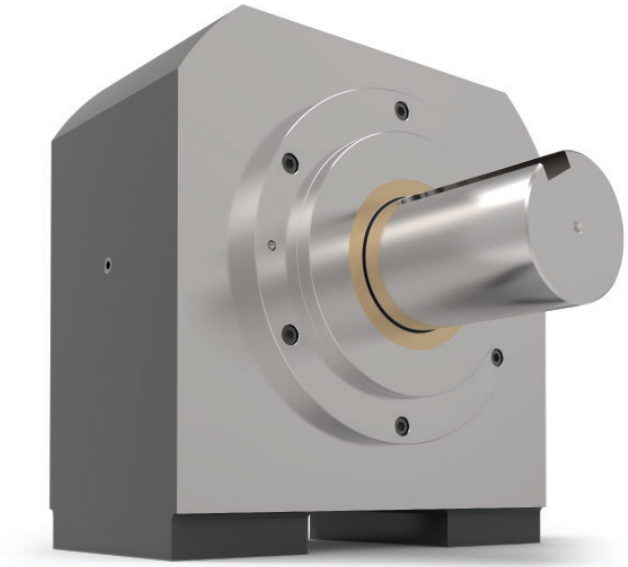

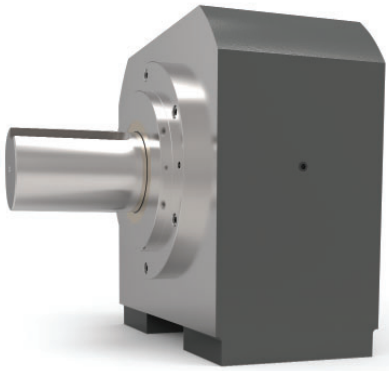

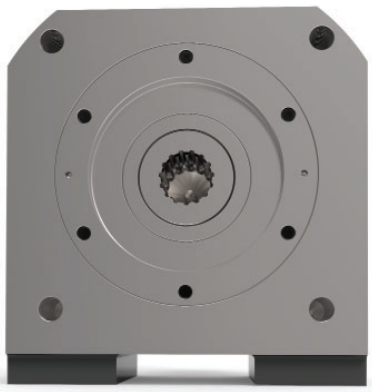

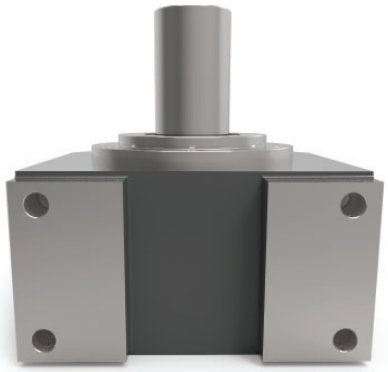

QHLA1500 Series

DIMENSIONS

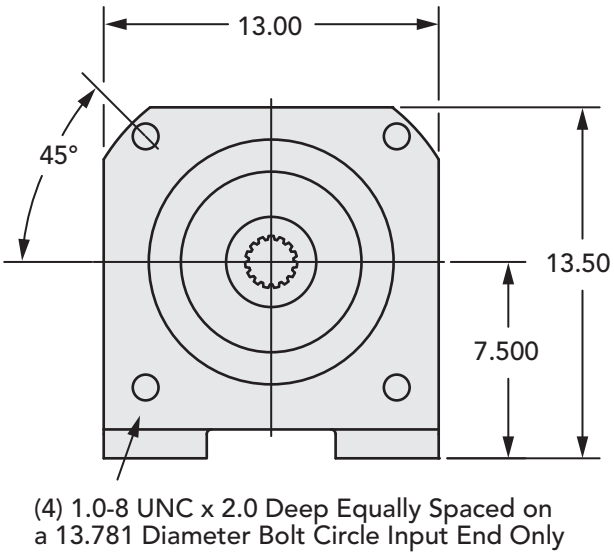

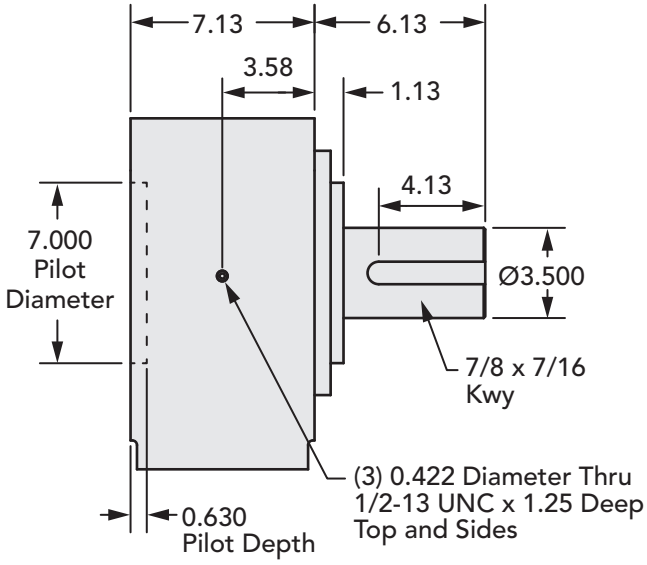

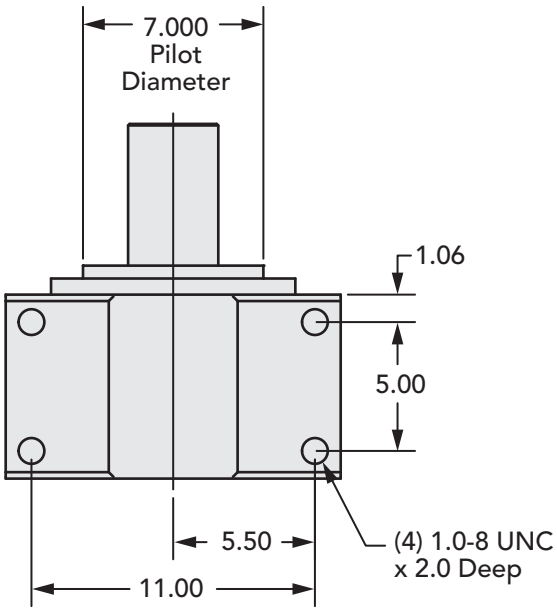

CODE

Part Number	Output Shaft - Keyway	Input Bore - Keyway
QHLA1500-15S	3-1/2" - 7/8 x 7/16	15 Tooth 8/16 Spline

QHLA615M Series

DESCRIPTION

Face Mount Pattern	SAE B 2-bolt or SAE B 4-bolt
Input Shaft Diameter	1-1/2"
Input Shaft Keyway	3/8" x 3/16" keyway
Input Shaft Keyway Length	1.69"
Input Shaft Length	2.35"
Input Shaft Seal Type	Double-lip with Garter Spring
Input Pilot	N/A
Input Plate Seal Type	O-Ring
Output Shaft Diameter	1-1/2"
Output Shaft Keyway	3/8" x 3/16" keyway
Output Shaft Keyway Length	1.69"
Output Shaft Length	2.35"
Output Shaft Seal Type	Double-lip with Garter Spring
Output Pilot Diameter	4.000"
Output Pilot Height	0.500"
Shaft Material	1144 Stressproof Steel
Bearing Type	Tapered Roller Bearings
Standard Lubrication Method	Grease
Optional Lubrication Methods	Please Consult Factory
Grease Fitting	(1) Standard Zerk Fitting
Grease Capacity	Minimum 2.2 oz. Maximum 4.4 oz.
Grease Type (recommended for typical applications)	NLGI #2
Recommended Grease base	Lithium
Standard mounting orientation	Shaft Horizontal - Consult Factory for other Mounting Orientations
Maximum Speed Without Modification	2300 RPM
Housing Material	Cast Iron
Housing Feet - Threaded Holes	(4) 7/16"-14 UNC x 0.75" deep
Housing Grease Ports	1/4-18 NPT
Unit Weight	30 lbs

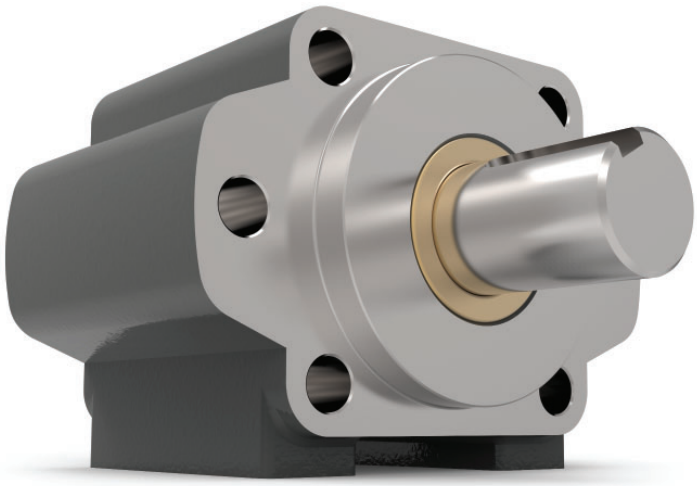

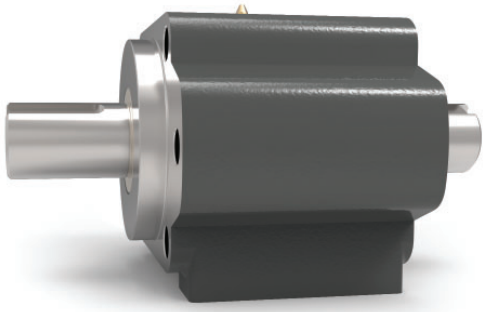

QHLA615M Series

DIMENSIONS

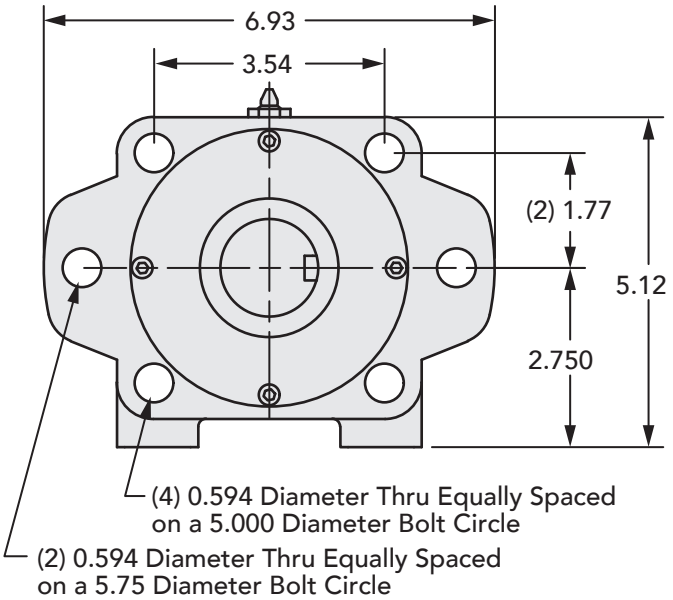

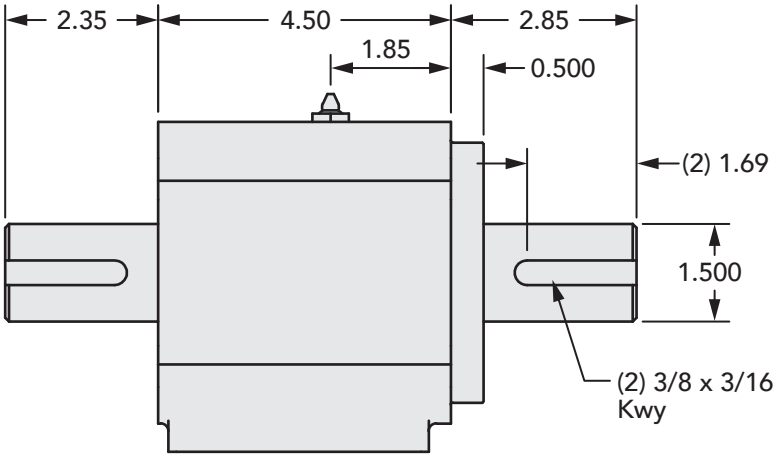

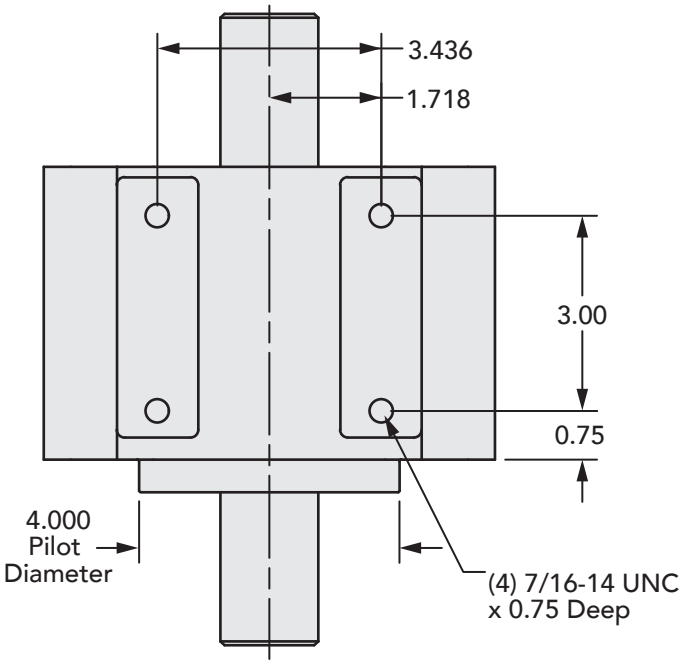

CODE

Part Number	Output Shaft - Keyway	Input Shaft - Keyway
QHLA615M	1-1/2" - 3/8 x 3/16	1-1/2" - 3/8 x 3/16

QHLA928M Series

DESCRIPTION

Face Mount Pattern	SAE C 2-bolt or SAE C 4-bolt
Input Shaft Diameter	1-3/4"
Input Shaft Keyway	7/16" x 7/32" keyway
Input Shaft Keyway Length	2.53"
Input Shaft Length	3.00"
Input Shaft Seal Type	Double-lip with Garter Spring
Input Pilot	N/A
Input Plate Seal Type	O-Ring
Output Shaft Diameter	1-3/4"
Output Shaft Keyway	7/16" x 7/32" keyway
Output Shaft Keyway Length	2.53"
Output Shaft Length	3.00"
Output Shaft Seal Type	Double-lip with Garter Spring
Output Pilot Diameter	5.000"
Output Pilot Height	0.500"
Shaft Material	1144 Stressproof Steel
Bearing Type	Tapered Roller Bearings
Standard Lubrication Method	Grease
Optional Lubrication Methods	Please Consult Factory
Grease Fitting	(1) Standard Zerk Fitting
Grease Capacity	Minimum 4.3 oz. Maximum 8.6 oz.
Grease Type (recommended for typical applications)	NLGI #2
Recommended Grease Base	Lithium
Standard Mounting Orientation	Shaft Horizontal - Consult Factory for other Mounting Orientations
Maximum Speed Without Modification	1900 RPM
Housing Material	Cast Iron
Housing Feet - Threaded Holes	(4) 1/2"-13 UNC x 1.00" deep
Housing Grease Ports	1/4-18 NPT
Unit Weight	55 lbs

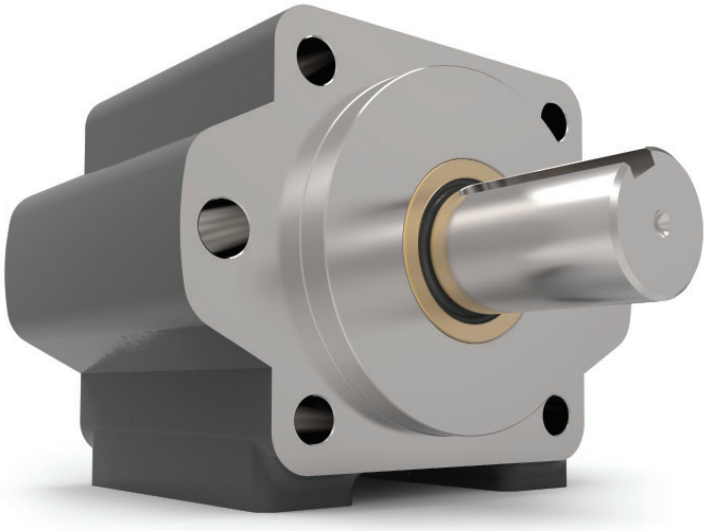

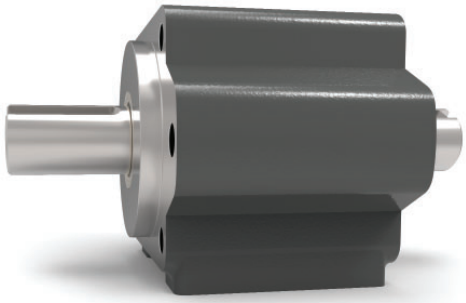

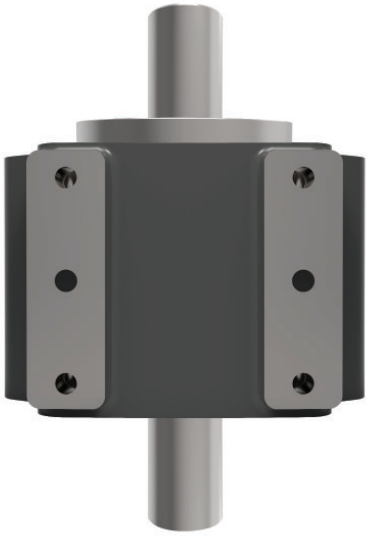

QHLA928M Series

DIMENSIONS

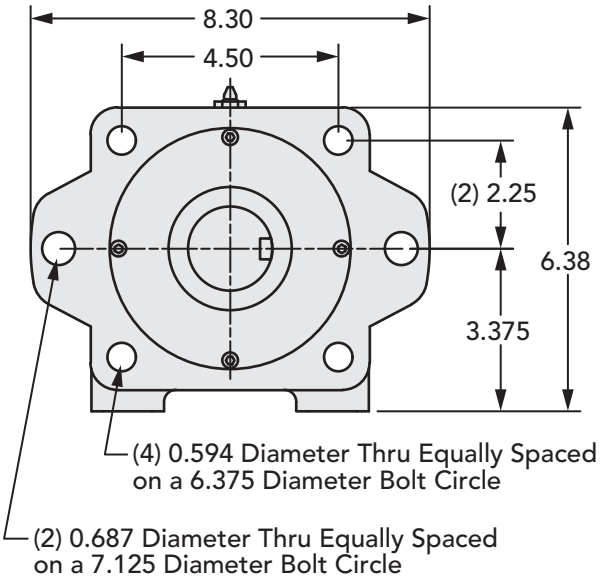

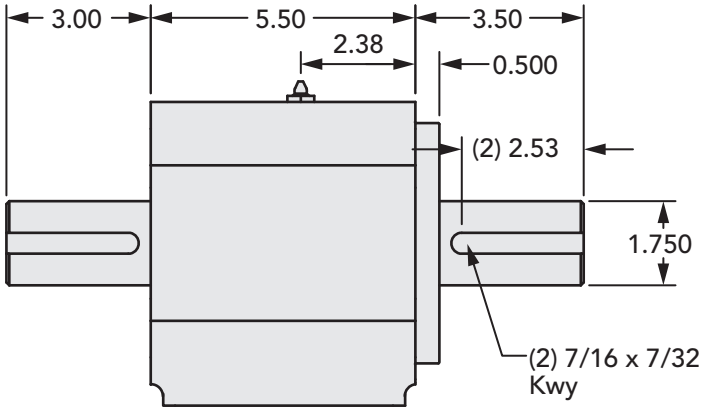

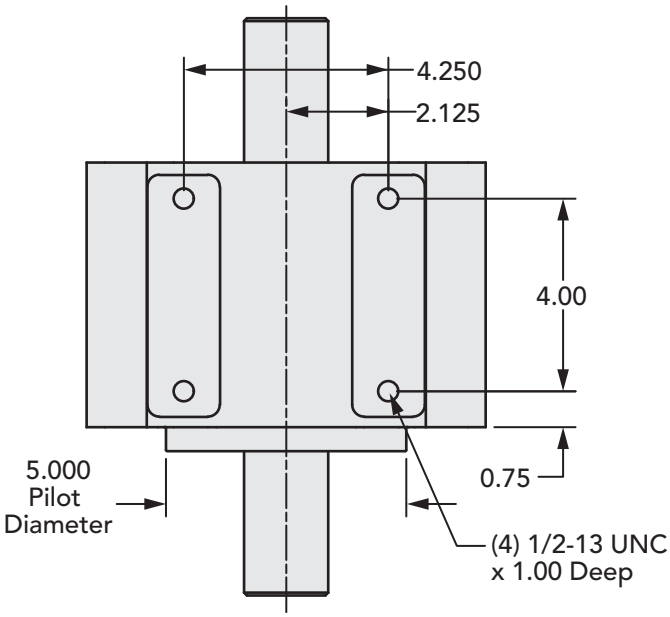

CODE

Part Number	Output Shaft - Keyway	Input Shaft - Keyway
QHLA928M	1-3/4" - 7/16 x 7/32	1-3/4" - 7/16 x 7/32

Sizing and Selection of Load Adaptors

Dimensional Criteria

- Standard unit may be selected for fitting-up to the hydraulic motor or pump dimensions
- CAD files are available on request to check for fit or detail drawings are available from factory
- Modifications to standard dimensions are available as needed
  - Please see Specials pages in catalog for examples of modifications we have done
  - Modifications not shown are also possible, please contact factory
  - Please contact factory for quote on special modifications

Performance Criteria

- If desired, Zero-Max Engineering will analyze the application and advise
  - Bearing lifetime,
  - Strength of shaft connections, and
  - Make lubrication recommendations
- Info needed to analyze application includes:
  - **Horsepower (HP)**
    - If unknown, please provide Pressure and Flow Rate through motor /pump
  - **Speed (rpm)**
  - **Overhung Load Information**
    - If pulley, need to know diameter and the distance from load center to the face of QHLA output pilot – see illustration
    - If a fan or blower, need to know the radial load, thrust load (and direction of thrust), and weight of fan
    - If other type of load connection, please provide equivalent radial and thrust loads (and direction of thrust) or provide a sketch for review
  - **Mounting Orientation**
    - Horizontal (shaft parallel to ground)
    - Vertical, shaft-up (shaft pointing at the sky)
    - Vertical, shaft-down (shaft pointing at the ground)
  - **Hydraulic Motor or Pump**
    - Part number, catalog page, or drawing of motor/pump showing shaft and pilot detail
    - Info is needed to confirm fit-up to QHLA, and for shaft strength calculations
  - **If any special operating environment requirements, please advise** ·
    Temperature extremes
    - Chemical exposure
    - Washdown
    - Underwater application
    - Other...

QHLA SPECIALS

Some of the special features we can add:

- Double-Male Shafts
- Drilled-and-Tapped Shaft End
- External Threaded Shaft-End
- Stepped Shoulder on Shaft for Retention / Positioning of Mounted Component
- Face Seals
- SAE or NPT Ports
- Pre-Greased Units
- Permanently-Lubed Units
- Breather Plugs
- Add-on Seal Carriers
- QPQ Finish for Corrosion Protection / Seal Life
- Tapered Output Shafts
- Stainless Steel Shafts
- Nickel-Plated Housings
- Custom Output Seals
- Tapped Mounting Holes
- Transition Between 2 SAE Mounting Sizes
- Other Features - as needed - please inquire...

- Drilled-and-Tapped Shaft-End

- Double-Male Shaft

- QPQ Finish on Shaft for Corrosion-Protection and Enhanced Seal Life

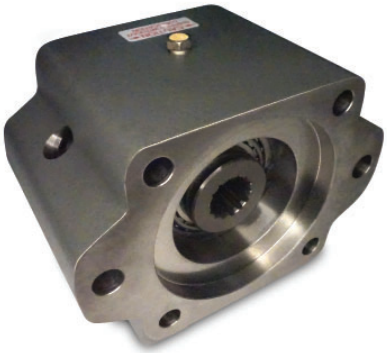

- Breather Plug
- Custom Splined Shafts

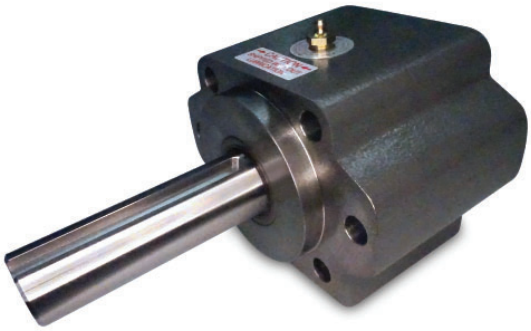

- Extended Shaft Length

QHLA SPECIALS

- Pre-greased and Plugged / Lubed-for-Life
- Extended Housing for Increased Bearing Stance and Longer Lifetime
- Face Seal for Added Protection

- Plugged for use in a Wet Environment
- Add-On Seal Carrier

- Adaptor Plate for Non-SAE Motors/Pumps or for Transitioning 2 Different SAE Mounts
- SAE O-ring Ports for Circulating Oil Lubrication

- Add-on Seal Carrier for Mechanical Seal or Special Seals
- External Threaded Shaft-End Including Cross-drilled Hole for Securing a Castellated Nut
- Tapered Output Shaft with Keyway

- QPQ Shaft
- Internal Seals for Vertical, Shaft-up Mounting
- O-Ring Ports for Circulating Oil Lubrication

- Double Male QHLA
- QPQ Shaft
- Closed End Keyway
- Nickel Plated Housing
- Special Seals

QHLA SPECIALS

- Shortened Housing for Weight Reduction
- Speed Sensor Port

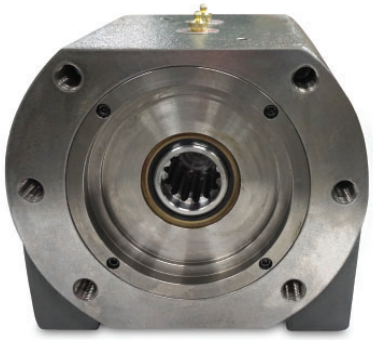

- DIN Splines
- Custom Splines

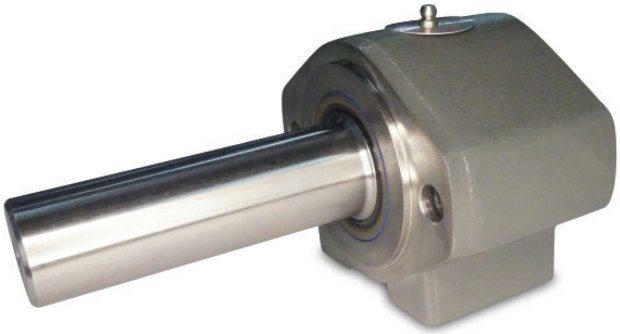

- Keyless Shaft for use with Keyless Locking Devices

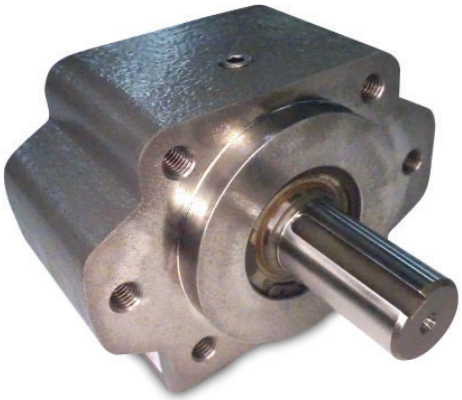

- NPT Lube Port
- Retaining Ring for High Pressure Seal Retention

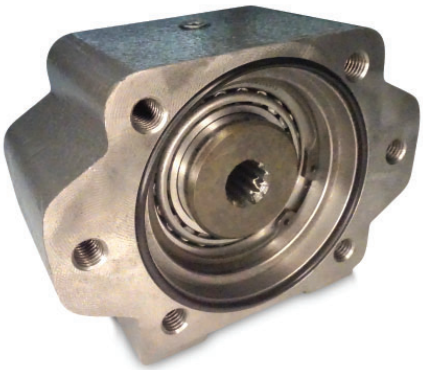

- Input Pilot
- O-Ring Seal

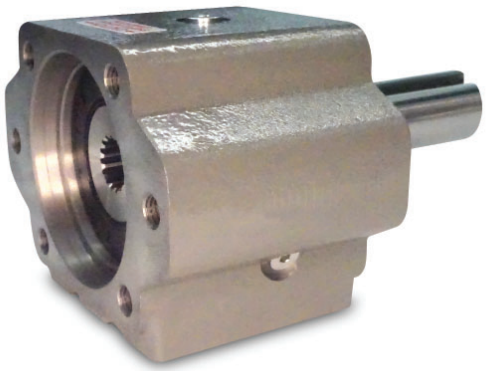

- SAE O-Ring Lube Ports Top and Side